AIPHONE

Installation Manual

IXG Series

IXG-MK Guard Station

IXG-DM7, IXG-DM7-HID Video Entrance Station

IXG-DM7-BOX Back Box for Entrance Station

IXGW-LC Lift Control Adaptor

IXGW-GW Gateway Adaptor

Introduction

- Read this manual before installation and connection. Read the "Setting Manual" and "Operation Manual". The manuals can be downloaded from our homepage at “https://www.aiphone.net/support/software-document/”.
- After completing installation and connection, program the system according to the "Setting Manual". The system cannot operate unless it is programmed.
- After performing installation, review with the customer how to operate system.



- Perform installation and connection only after gaining sufficient understanding of the system and this manual.
- The illustrations used in this manual may differ from the actual product.

Literature information

The important information concerning correct operation and what you should observe is marked with the following symbols.

	Indicates that users may require caution (including warning / caution).
	Alerts users to prohibited actions.
	Restricts user actions / provides instructions.
	Tips and additional information for operation.

Precautions

Warning — Negligence could result in death or serious injury.



Do not disassemble or modify the station.
This may result in fire or electrical shock.



Do not connect any terminals on the station directly to an AC power line.
This may result in fire or electrical shock.



Do not, under any circumstances, open the station.
Voltage within some internal components may cause electrical shock.

Caution — Negligence could result in injury to people or damage to property.



Do not install or connect the station with the power on.
This may result in electrical shock or malfunction.



Make sure the wiring is correct and there are no wiring shorts before switching on the station.
This may result in fire or electrical shock.



Do not install the station in a place subject to frequent vibration or impact.
This may result in injury.



Install in a place where the station will not get easily bumped.
This may result in injury.



Do not put your ear close to the speaker when using the station.
May cause harm to the ear if a sudden loud noise is emitted.



When testing chime volume and ringtone volume, do not hold the handset close to your ear.
May cause harm to the ear if a sudden loud noise is emitted.

General Precautions

- Install low-voltage lines at least 30cm (12") away from high-voltage lines (AC100V - 240V), especially inverter air conditioner wiring. This may result in interference or malfunction.
- When installing or using the station, give consideration to the privacy rights of subjects, as it is the responsibility of the system owner to post signs or warnings in accordance with local ordinances.
- Do not install the station in the ceiling or on the floor. Doing so would prevent maintenance inspections and repairs from being carried out. This may result in malfunction.

Notice

- If the station is used in areas where there are business-use wireless devices such as a transceiver or mobile phones, it may cause malfunction.
- If the station is installed in an area with an extremely strong electrical field, such as in the vicinity of a broadcasting station, it may create interference and cause malfunction.
- A human body detection sensor detects temperature changes within the detection range, but it may not detect or the sensitivity may change depending on the ambient temperature and environment.

Precautions for mounting

- Installing the station in the following locations as is may affect the clarity of the image:
  - Where the device is installed in a dark location and there is light behind the subject
  - Where lights will shine directly into the camera at night time
  - Where direct sunlight is present
- Installing the device in the following locations could cause malfunction:
  - **Locations under direct sunlight**
  - **Locations near heating equipment**
  - **Locations subject to liquid, iron filings, dust, oil, or chemicals**
  - **Locations subject to moisture and humidity extremes**
  - **Locations where the temperature is quite low**
  - **Locations subject to steam or oil smoke**
  - **Sulphurous environments**
  - **Locations close to the sea or directly exposed to sea breeze**
- In 50Hz regions, if a strong fluorescent light enters directly into the camera, it may cause the image to flicker. Either shield the camera from the light or use an inverter fluorescent light.
- If existing wiring is used, the device may not operate properly. In that case, it will be necessary to replace the wiring.
- Do not use an impact driver to fasten screws. Doing so may cause damage to the device.
- IXG-MK, IXGW-LC, IXGW-GW is designed for indoor use only. Do not install at outdoor location.
- Observe the following restrictions for installing entrance stations.
  - When cleaning the wall with a high-pressure washing machine, avoid to spray on the entrance station.
  - Do not mount the entrance station so that if faces obliquely upward.
  - Do not block the bottom of entrance station by caulking.
- Avoid installing the master monitor station in concave space of a wall to prevent disconnection of communication.
- If the LCD display comes into contact with rain, it may not respond when touched or cause false reactions to occur. Please install the unit in an area where it doesn't come in contact with rain.

Table of contents

Literature information 1

Precautions 1

Example of System Configuration 5

Example of Standard System 5
Example of Multi-building System 6

Part Names and Accessories 7

IXG-MK 7
IXG-DM7, IXG-DM7-HID 8
IXG-DM7-BOX 9
IXGW-LC 9
IXGW-GW 10

Status Indicator 11

IXG-MK 11
IXGW-LC 11
IXGW-GW 11

About microSD card 12

How to Install 13

IXG-MK 13
Mounting the station on a wall 13
Mounting the station on the desktop stand 14
IXG-DM7, IXG-DM7-HID 15
IXGW-LC 16
Mounting the adaptor directly to a wall 16
IXGW-GW 17

Camera View Range and Mounting Position 18

IXG-MK 18
Camera View adjustment 18
Camera View range 18
IXG-DM7, IXG-DM7-HID 19
Mounting positions and image view area 19

How to Connect 20

Connection Precautions 20
Cat-5e/6 cable 20
Precautions regarding low-voltage line 20
Connection and disconnection of low-voltage lines 20
Wiring Connection 22
IXG-MK 22
IXG-DM7, IXG-DM7-HID 23
IXGW-LC 24
IXGW-GW 24
Specifications 25
IXG-DM7-BOX 25
IXGW-LC 25
IXGW-GW 25
About the Error Screen 26

Example of System Configuration

■ Example of Standard System

A maximum of 9,999 of the following stations and adaptors can be connected:
IXG-2C7(-L), IXG-DM7(-HID), IXG-MK, IX-MV7-*, IXGW-LC, IXGW-GW, IX-RS-*※1, door stations (IX-DA※2, IX-BA※2, IX-DV, IX-DVF(-*), IX-SS-2G※1, IX-SSA(-*), IX-EA)
A maximum of 9,999 mobile devices can be connected:
ASP-IXGI, ASP-IXGA
※1 Scheduled to be connectable during the third quarter of 2020
※2 Can be used with a standard system. Cannot be used with a multi-building system.

Residential Unit	IXG-2C7(-L) or IX-RS-* (max.8 per unit), mobile device (max.8 per unit), door station (max.2 per unit)
Commercial Unit	IX-MV7-* or IX-RS-* (max.8 per unit), mobile device (max.8 per unit), door station (max.2 per unit)
Common Inside Area	IXG-MK, IX-MV7-*, or IX-RS-* (max.8 per unit), door station (max.2 per unit)
Common Outside Area	Door station (max.10 per unit)
Guard Unit	IXG-MK or IX-RS-* (max.8 per unit), mobile device (max.8 per unit), door station (max.2 per unit)
Entrance	IXG-DM7(-HID) (max.10 per unit)
Other	IXGW-LC (max.16 per building), IXGW-GW (max.1 per system)

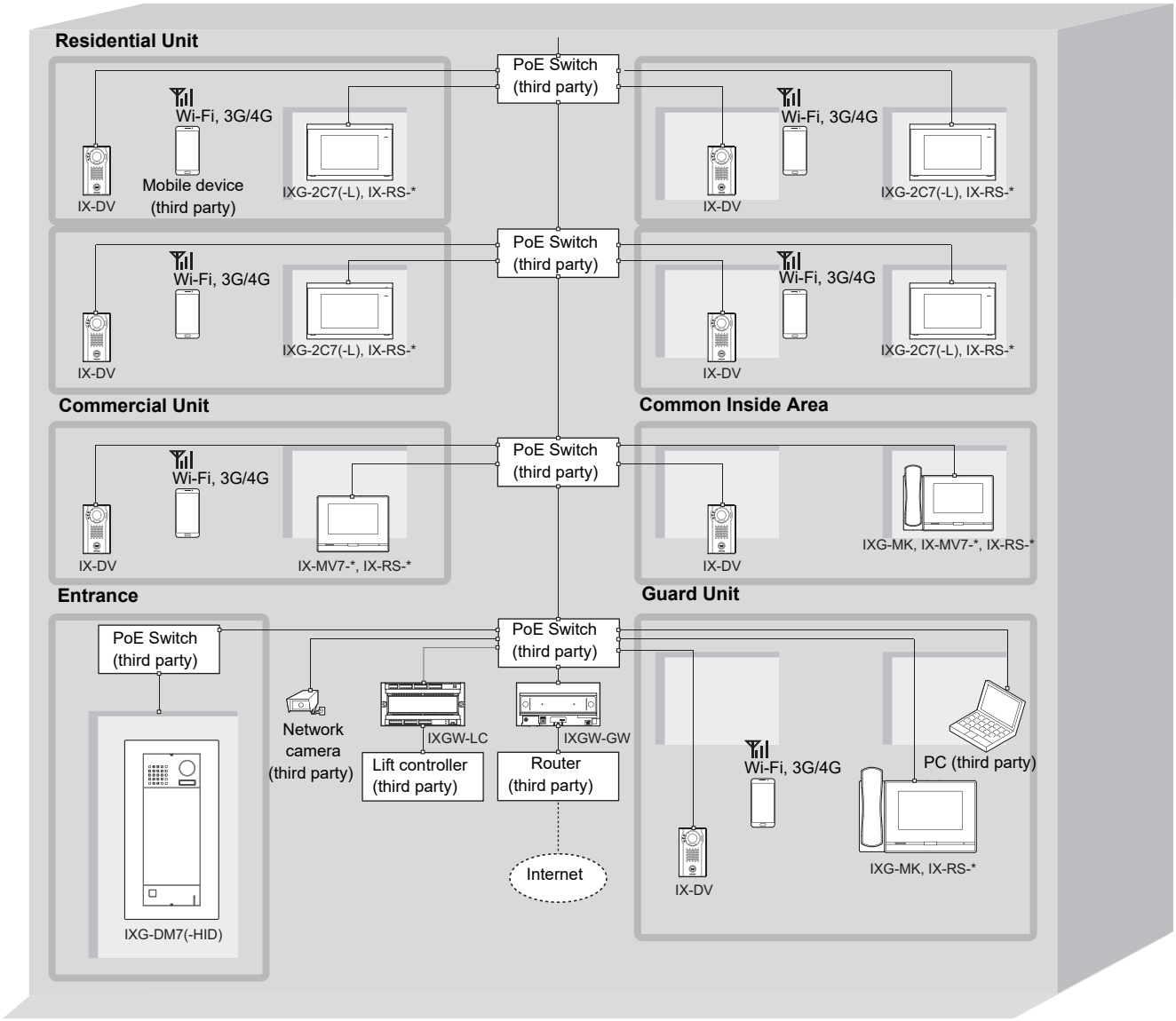

■ Example of Multi-building System

Maximum number of buildings: 99 buildings
A maximum of 9,999 of the following stations and adaptors can be connected with a multi-building system:
IXG-2C7(-L), IXG-DM7(-HID), IXG-MK, IX-MV7-*, IXGW-LC, IXGW-GW, IX-RS-*※1, door stations (IX-DV, IX-DVF(-*), IX-SS-2G※1, IX-SSA(-*), IX-EA)
A maximum of 9,999 mobile devices can be connected with entire multi-building system:
ASP-IXGI, ASP-IXGA
※1 Scheduled to be connectable during the third quarter of 2020

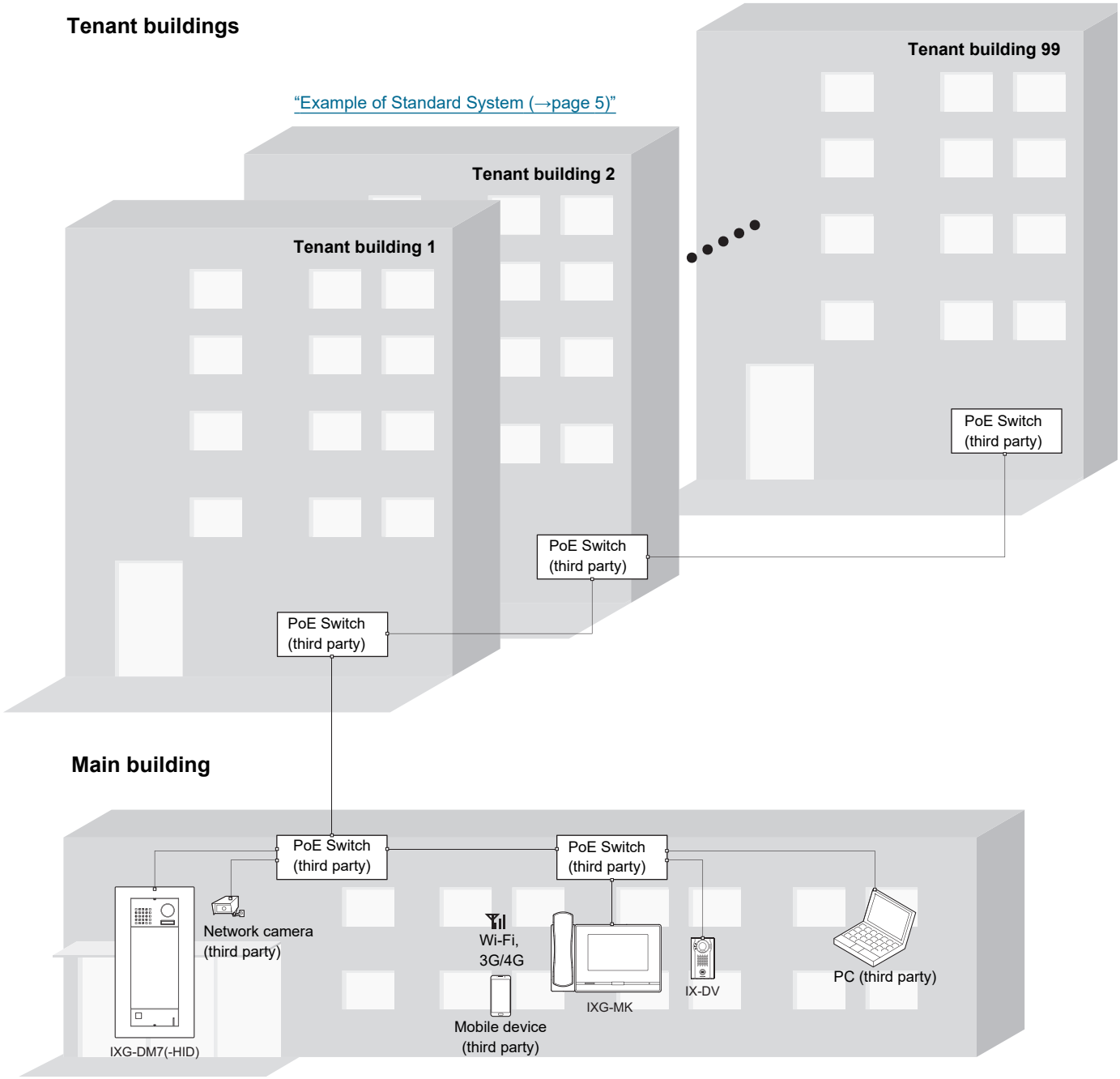

Part Names and Accessories

■ IXG-MK

Scheduled for release in the 3rd quarter of 2020.

Front view

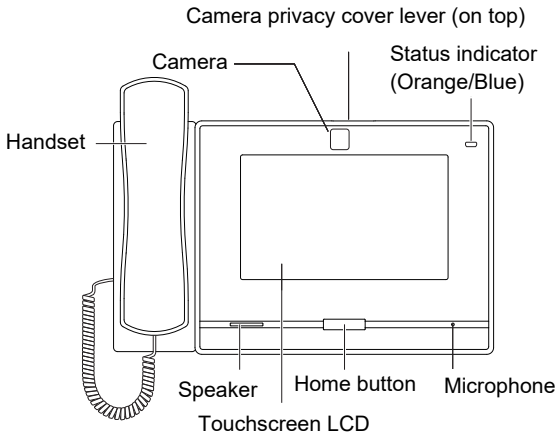

Side view

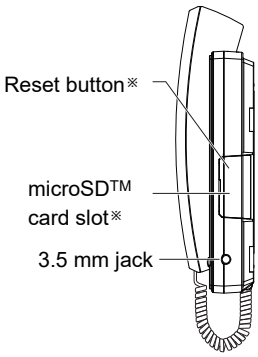

※Accessible when terminal cover is opened

Back view

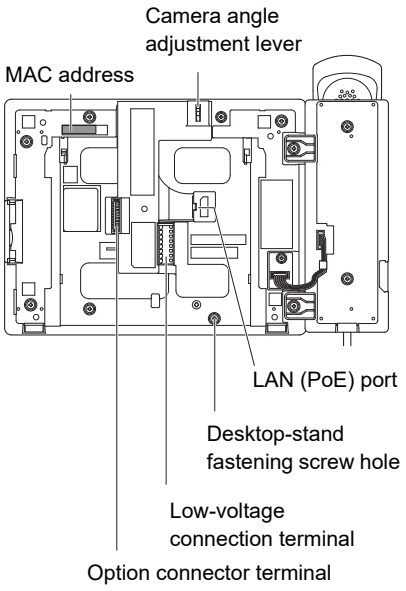

Included accessories

Installation Manual x 2 (English, French) 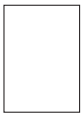	Download guide x 1 	Chinese RoHS declaration x 1 	Desktop-stand x 1 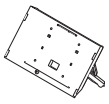
Mounting-bracket screws x 4 	Mounting bracket x 1 (attached to the station) 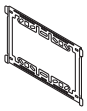	Cable tie x 1 	Wall-mounting wood screws x 4 
Desktop-stand screws x 4 	Option connector x 1 	Desktop-stand fastening screw x 1 	

■ IXG-DM7, IXG-DM7-HID

Front view

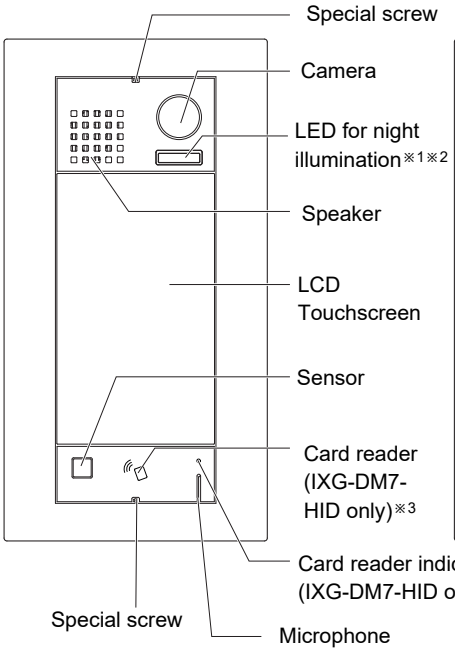

Back view

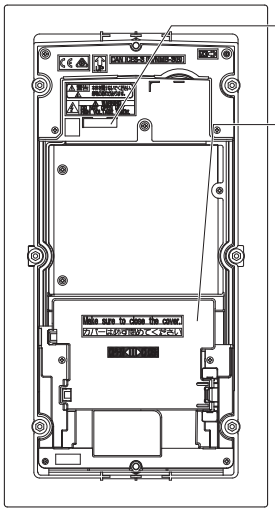

Under the Terminal cover

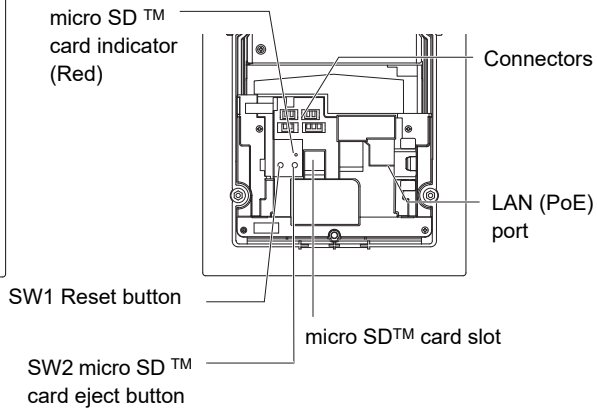

※1 Lights when accepting reboot.
※2 Flashes when the terminal starts up or when accepting ID/password initialization.
※3 Compatibility card

Card type	High Frequency (13.56MHz)	HID iCLASS, SEOS, HID iCLASS SR, HID iCLASS SE, HID MIFARE Classic, HID Mifare DES Fire EV1
	Low Frequency (125kHz)	HID Proximity, Indala Proximity
	Bluetooth Interface (2.44GHz)	Mobile phone compatible with Bluetooth Smart (smartphone)
Card format	H10301 (26-bit Wiegand Format)	

Included accessories

Instlation Manual x 3 (English, French※, Japanese※) 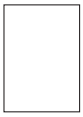	Product warranty※ x 1 (for Japanese market) 	Download guide x 1 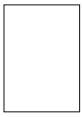	Chinese RoHS declaration※ x 1 
Option connectors x 3 (3pin x 2, 5pin x 1) 	Special screwdriver x 1 	Mounting-bracket screws x 4 	Mounting bracket x 1 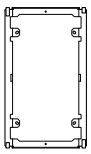

※IXG-DM7 only

■ IXG-DM7-BOX

Front view

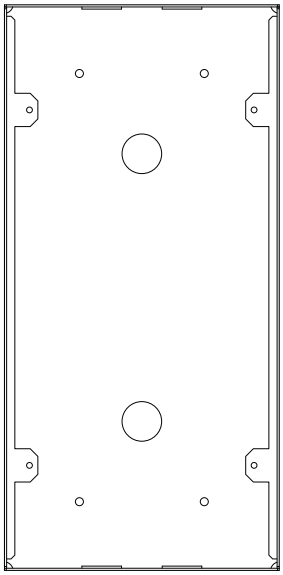

■ IXGW-LC

Front view

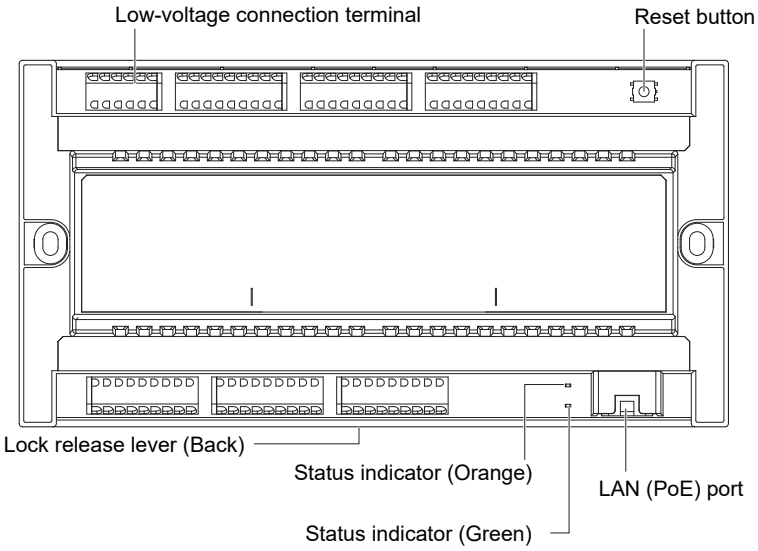

The MAC address is on the back of the device.

Included accessories

Download guide x 1 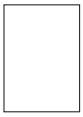	Chinese RoHS declaration x 1 		

■ IXGW-GW

Front view

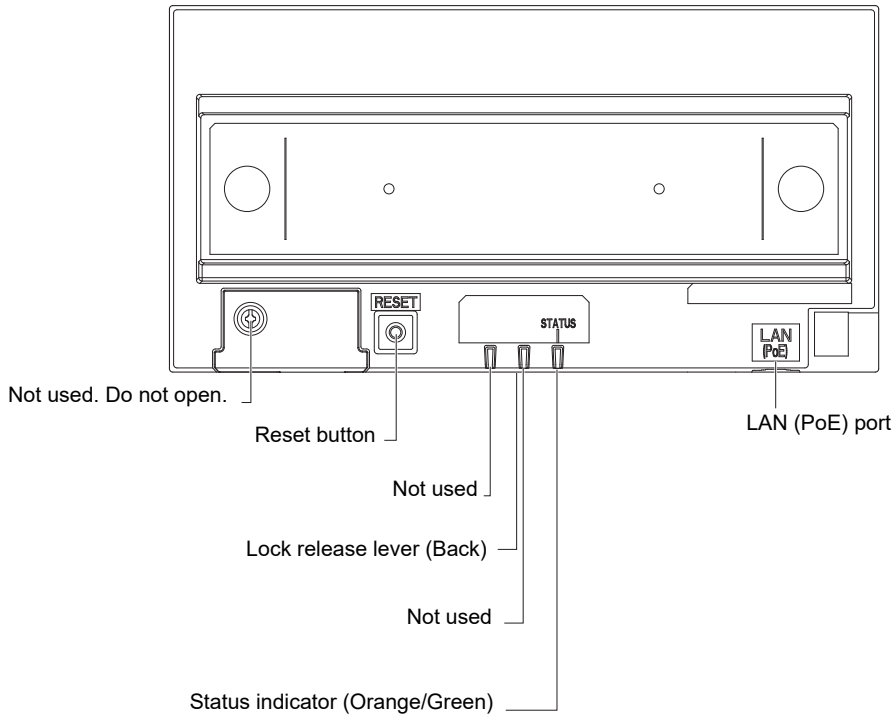

The MAC address is on the back of the device.

Included accessories

Product warranty x 1 (for Japanese market)	Download guide x 1	Chinese RoHS declaration x 1	DIN rail x 1 (attached to the unit)

Status Indicator

Refer to "Operation Manual" for additional indicators not listed.

■ IXG-MK

:Lit □ : Off

Status (pattern)		Description
Orange flashing	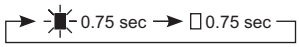	Booting
	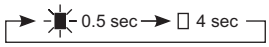	Communication failure
		Firmware version updating
		Initializing
Blue light		Standby (Depends on setting)

■ IXGW-LC

Status (pattern)		Description
Orange flashing	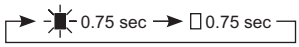	Booting
		Firmware version updating
		Initializing
Green light		Standby

■ IXGW-GW

Status (pattern)		Description
Orange light		IXG Cloud Sever authentication error
Orange flashing	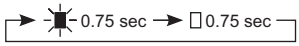	Booting
	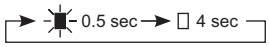	Communication failure
		Firmware version updating
		Initializing
Green light		Standby

About microSD card

Choose a microSD card (sold separately) using the recommended specifications below (these are referred to collectively as "microSD cards").

Station Type	Standard	Supported storage capacity	Format	Speed class
IXG-DM7(-HID) IXG-MK	microSDHC memory cards	4 GB to 32 GB	FAT32	SD speed class 10 UHS speed class 1
IXG-MK	microSDXC memory cards	64 GB to 128 GB	exFAT	

- A microSD card is not included with this station.
- Some microSD cards may not operate properly.
- If the card contains data other than video/audio files, it may not have enough space to record video/audio recordings.
- The network camera may not be able to record video, depending on the size of the video.

- A maximum of 999 video/audio files can be saved. However, this may vary depending on the size of the video/audio files and the capacity of the microSD card.
- Aiphone is not to be held responsible in any way for microSD cards.

How to Install

■ IXG-MK

● Mounting the station on a wall

Back wiring

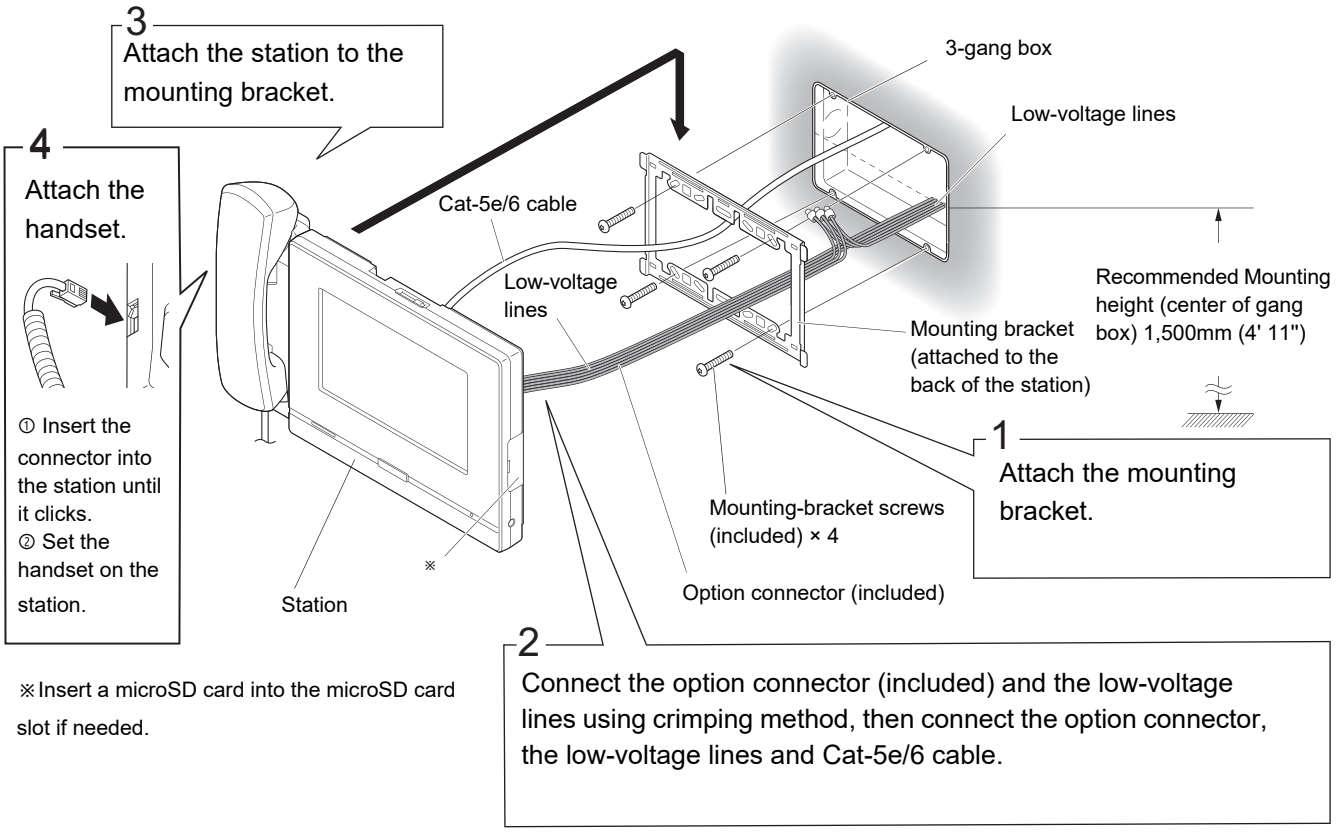

Surface wiring

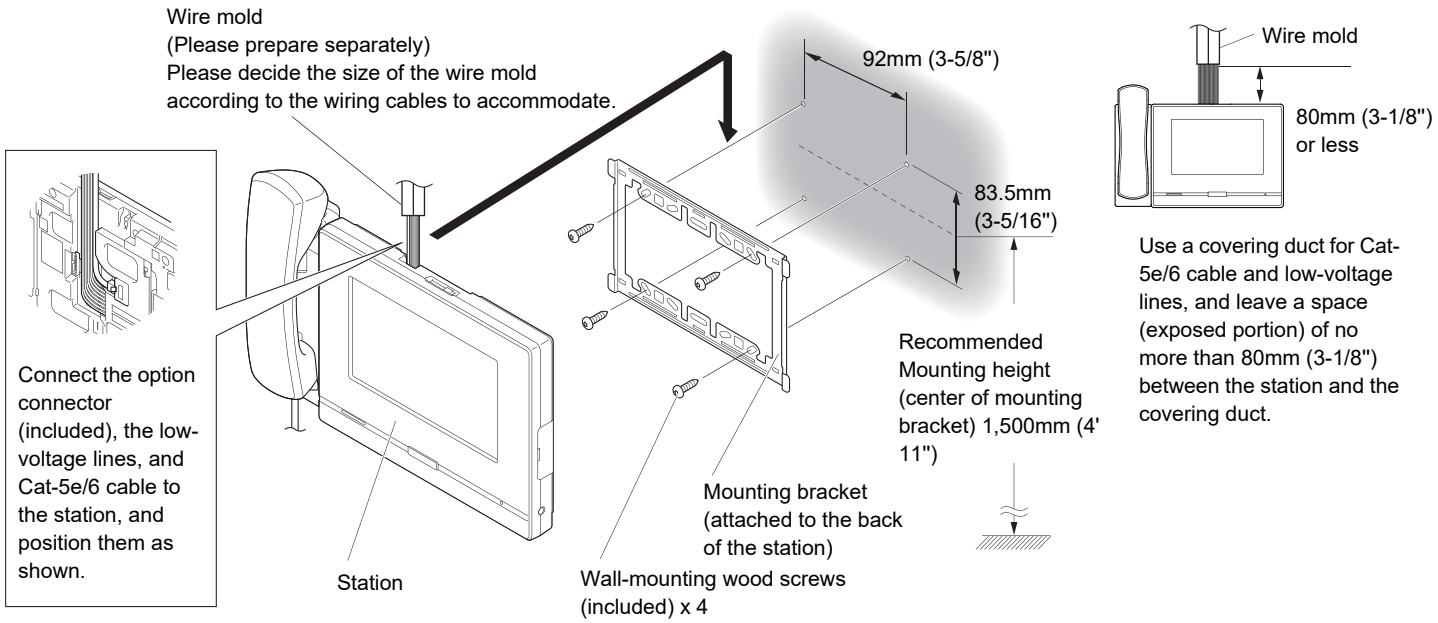

- If the accessory screws are unusable for plaster board or a concrete wall, etc., please use a product such as an anchor or concrete plug (not included).

● Mounting the station on the desktop stand

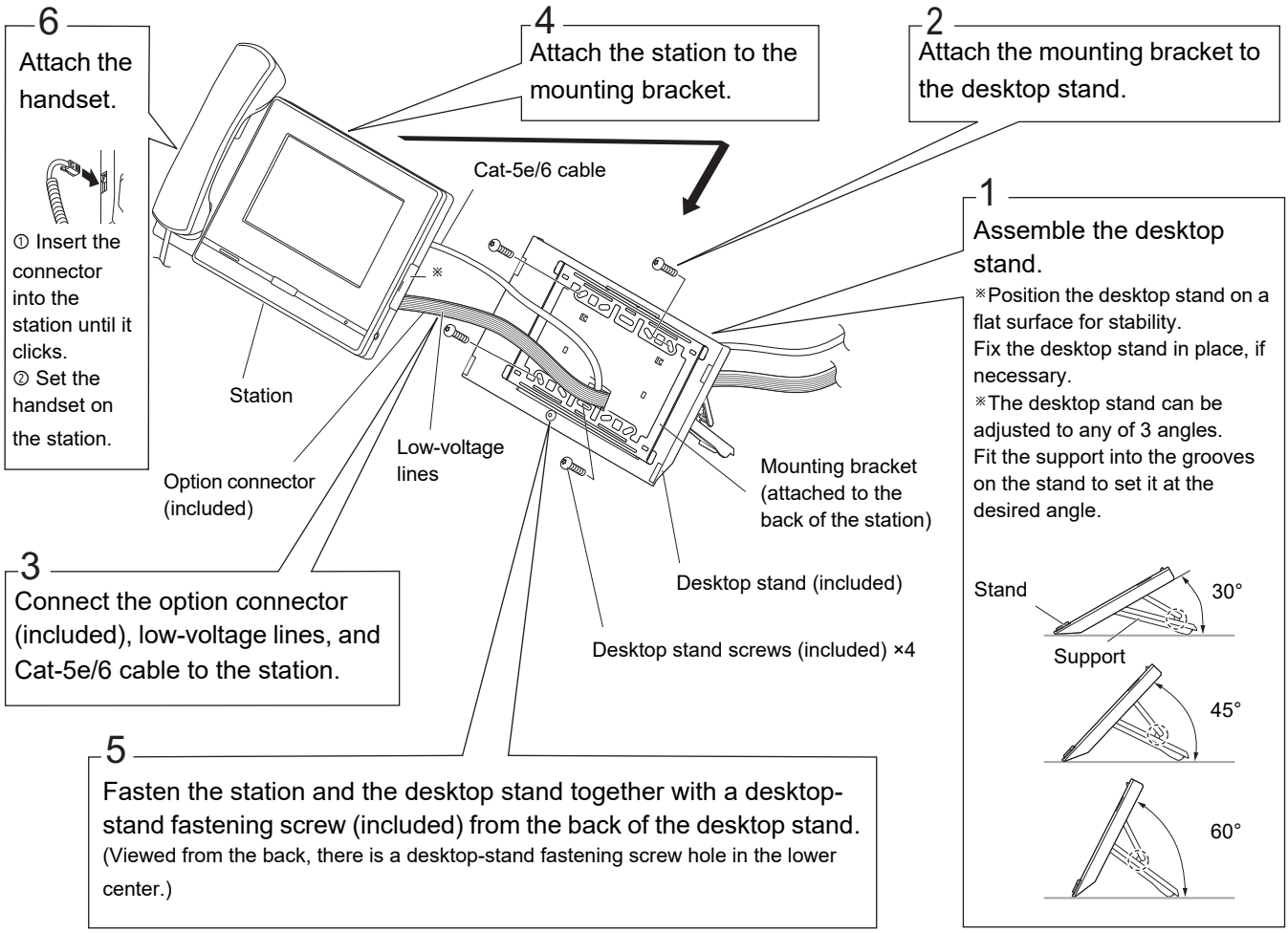

※Insert a microSD card into the microSD card slot if needed.

- Fasten the mounting bracket to the desktop stand with the supplied screws.
- If necessary, secure the Cat-5e/6 cable or low-voltage line using the included cable tie.
- When using the Desktop mounting, use the included Desktop stand.

■ IXG-DM7, IXG-DM7-HID

Back Box for Entrance Station (IXG-DM7-BOX) is sold separately.
The illustrations explain installation using the IXG-DM7 model.

- When installing the station on a rough surface, please seal the station edges to prevent water entering the station. If the station edges are left unsealed on a rough surface, IP65 ingress protection rating is not guaranteed.
- If the embedded box is exposed, water and dust will enter through the opening of the embedded box, and IP65 is not fulfilled.

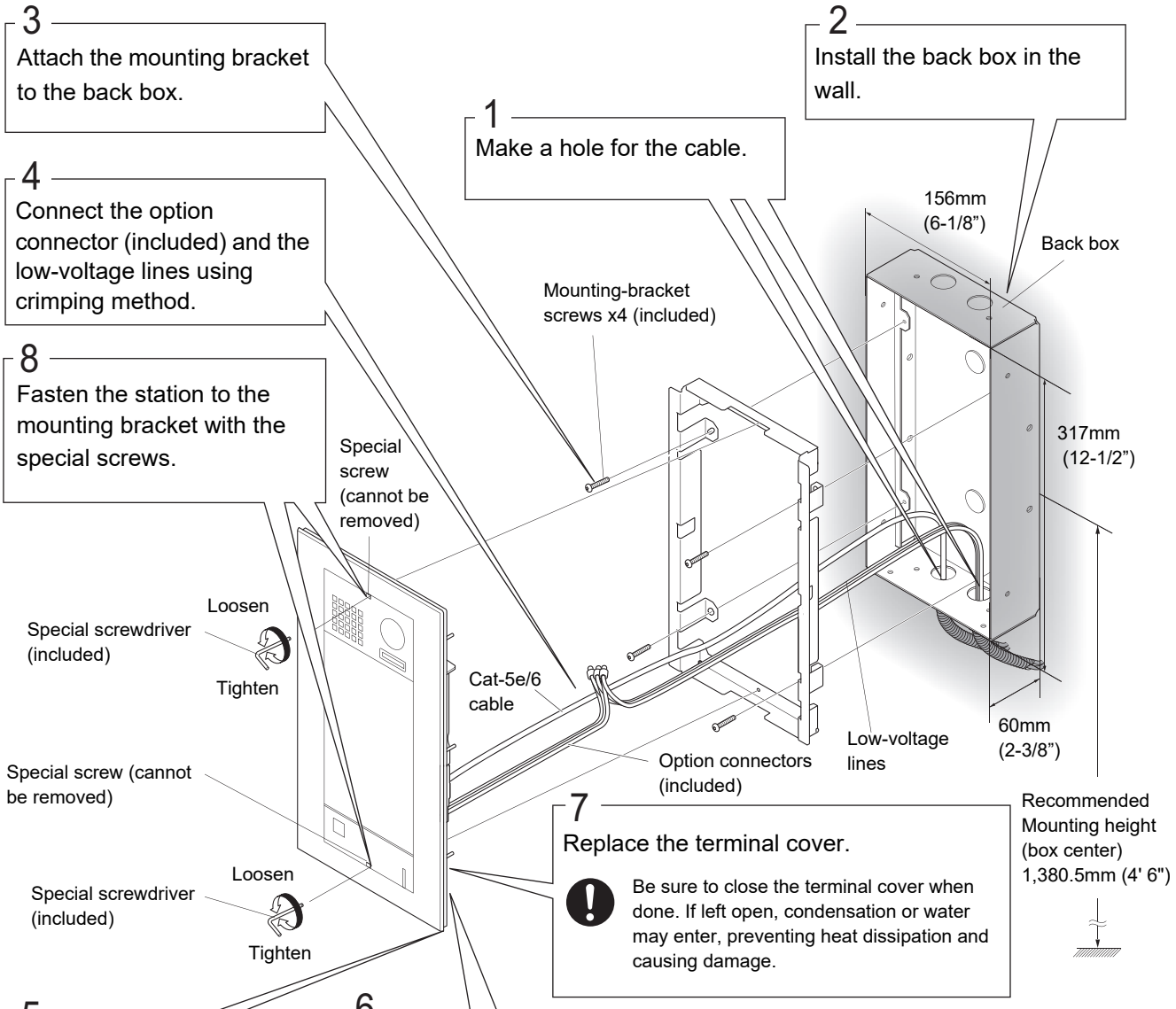

5

Slide the terminal cover left, and open up it.

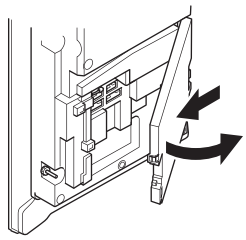

6

Insert the option connectors and Cat-5e/6 cable to the station. Insert a micro SD card into the micro SD card slot if recording function is used.

- Push the micro SD card in until you hear it click into place.
- The micro SD card indicator will light red while mounting the micro SD card.
- To take the microSD card out, push the [microSD card eject] button (SW2) on the back of the station one time (The microSD card indicator will turn off. Do not remove the card while the indicator is lighting). When the indicator turns off, push the microSD card until you hear a click, then remove.

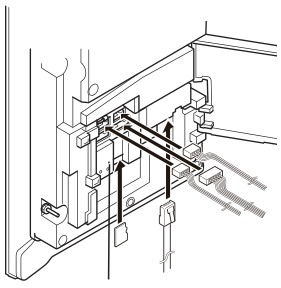

micro SD card indicator

■ IXGW-LC

● Mounting the adaptor directly to a wall

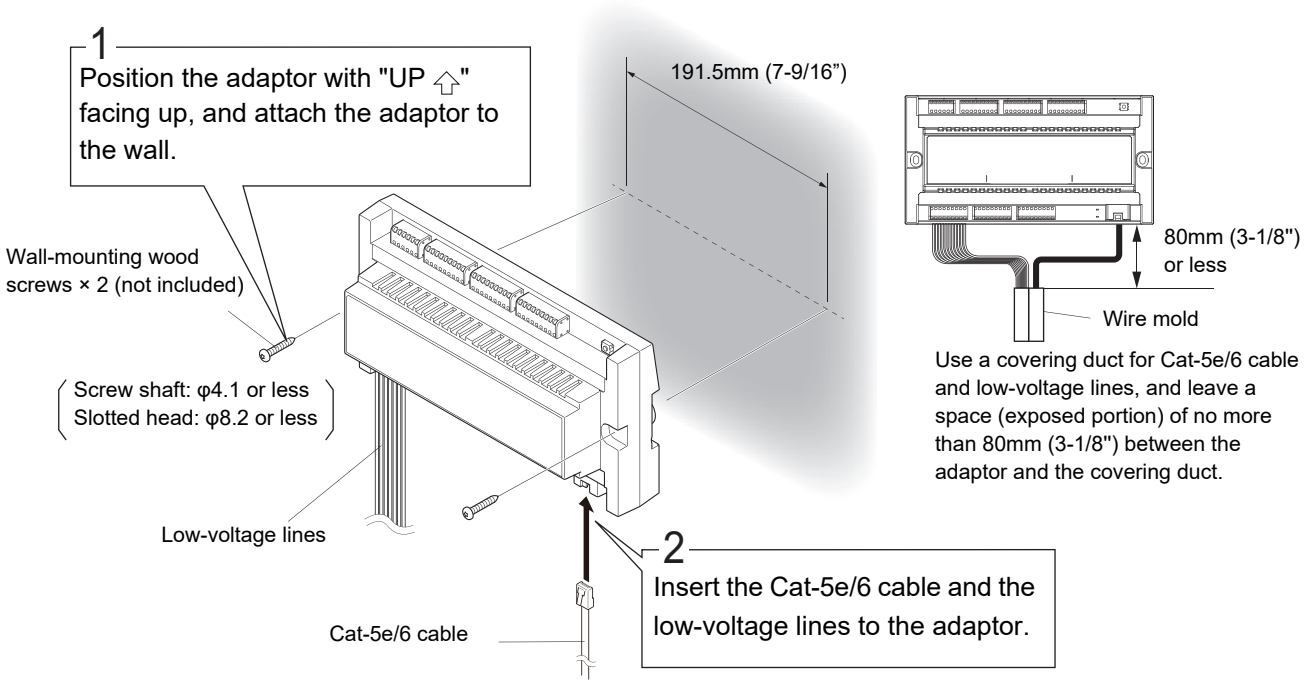

Mounting the adaptor on the DIN rail

DIN rail is not included.

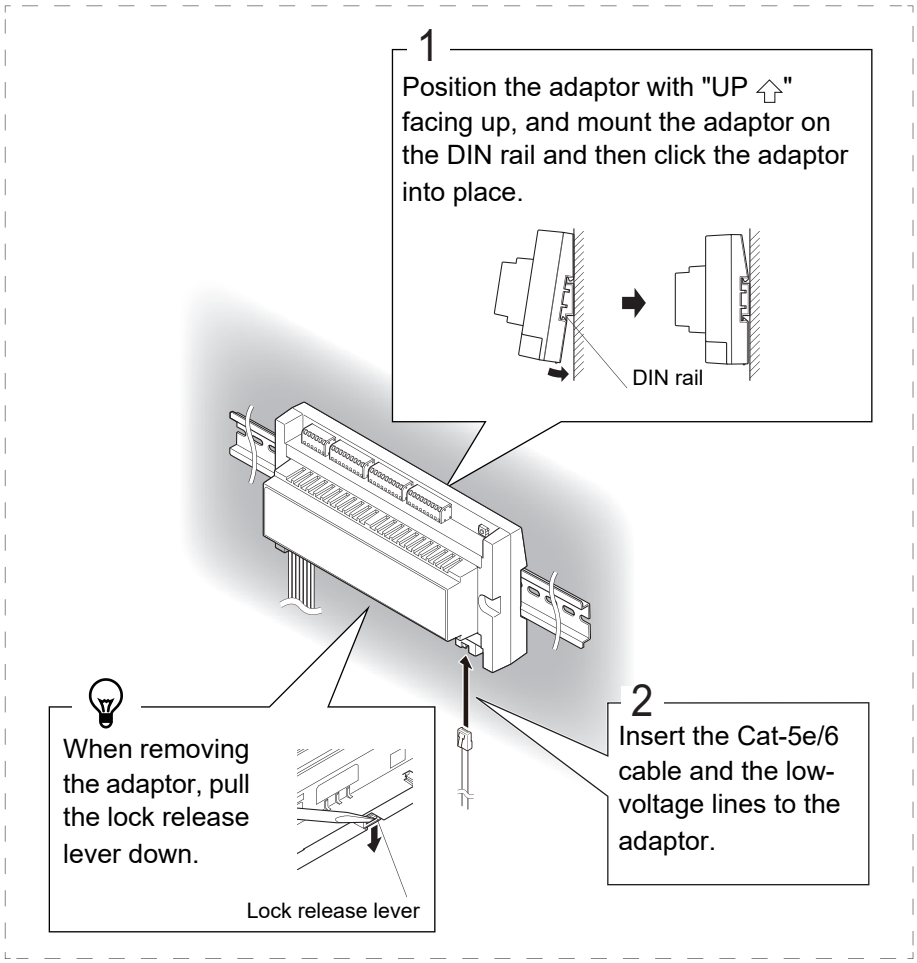

■ IXGW-GW

1
Pull the lock release lever down to remove the DIN rail from the adaptor.

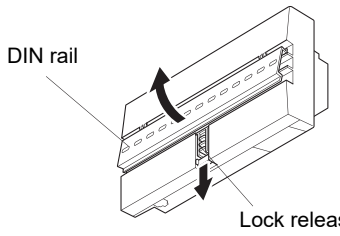

3
Position the adaptor with "UP ⇧" facing up, and mount the adaptor on the DIN rail and then click the adaptor into place.

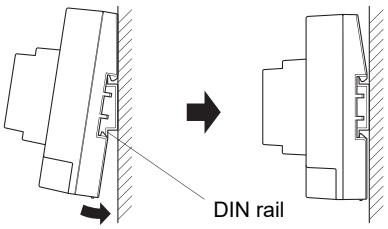

2
Attach the DIN rail to the wall.

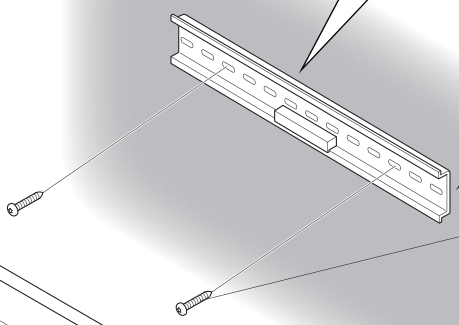

Wall-mounting wood screws x 2 (not included)

Screw shaft: φ4.1 or less
Slotted head: φ8.2 or less, 3.0mm or less in height.

4
Insert the Cat-5e/6 cable to the adaptor.

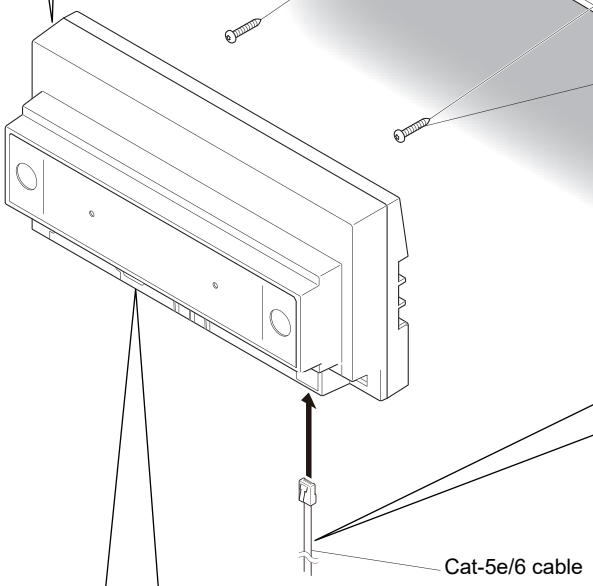

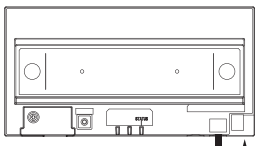

Use a covering duct for Cat-5e/6 cable and leave a space (exposed portion) of no more than 80mm (3-1/8") between the adaptor and the covering duct.

When removing the adaptor, pull the lock release lever down.

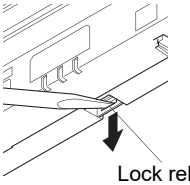

Camera View Range and Mounting Position

■ IXG-MK

● Camera View adjustment

Using the camera angle adjustment lever, the camera can be tilted down (0° to -20°).
Please adjust the camera to the optimal position.

Back view

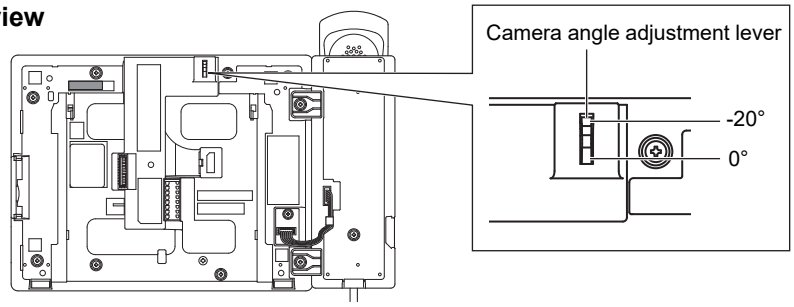

● Camera View range

The camera range as illustrated is only an approximate indication and may vary according to the environment.

When installed on a flat desktop (with desktop stand at 45° and camera angle at the lowest position [-20°])

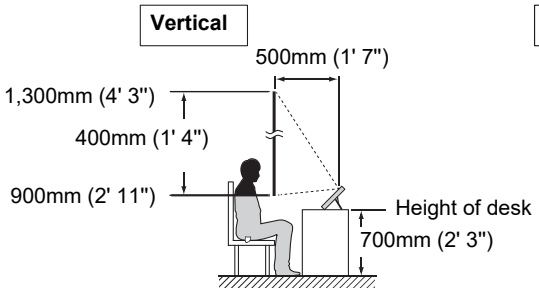

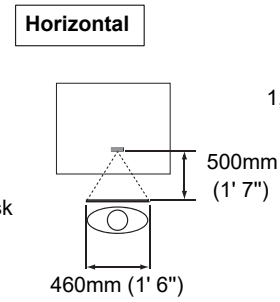

When installed on a flat desktop (with desktop stand at 30° and camera angle at the lowest position [-20°])

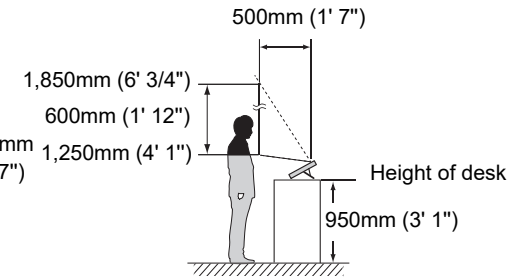

Wall mounting

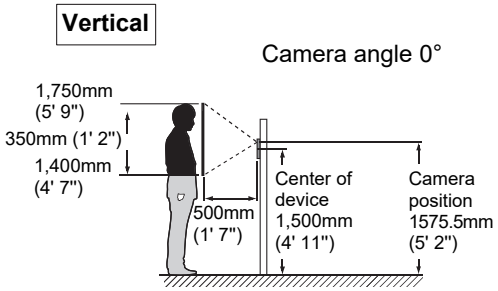

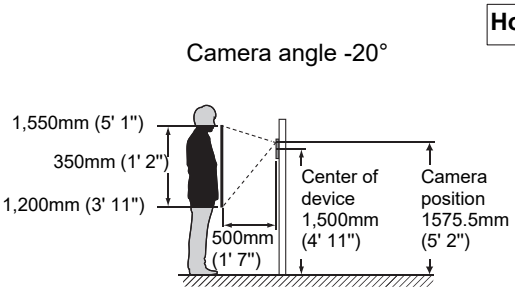

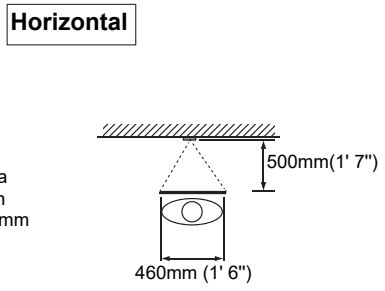

The dimensions are approximate in this page.

When light enters the camera, the monitor screen may flicker brightly or the subject may become dark. Try to prevent strong lighting from entering the camera directly.

■ IXG-DM7, IXG-DM7-HID

● Mounting positions and image view area

• Follow the applicable laws and regulations for mounting location.

Wide view

Vertical

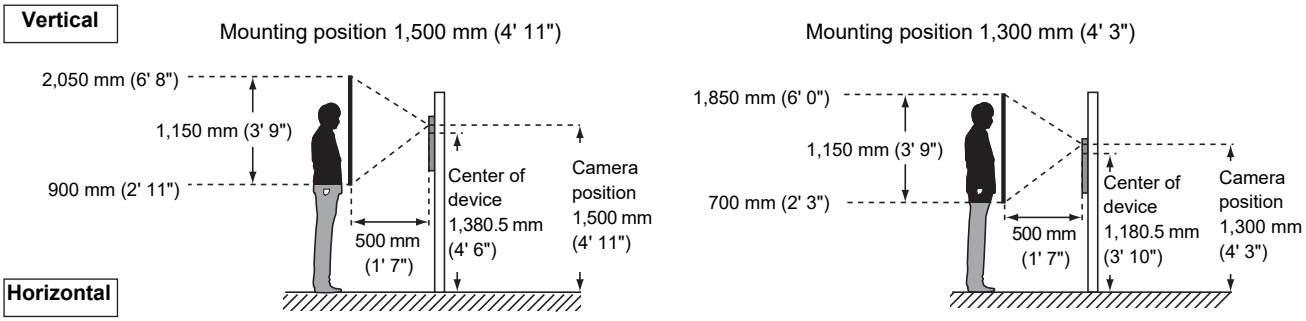

Horizontal

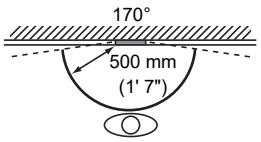

An area over a range of approx. 170° in a 500 mm (1' 7") radius from the camera displays. (The display range is a rough estimation and may change due to the installation environment and the specification of the monitor.)

Zoom view

Vertical (with mounting position of 1,500 mm (4' 11"))

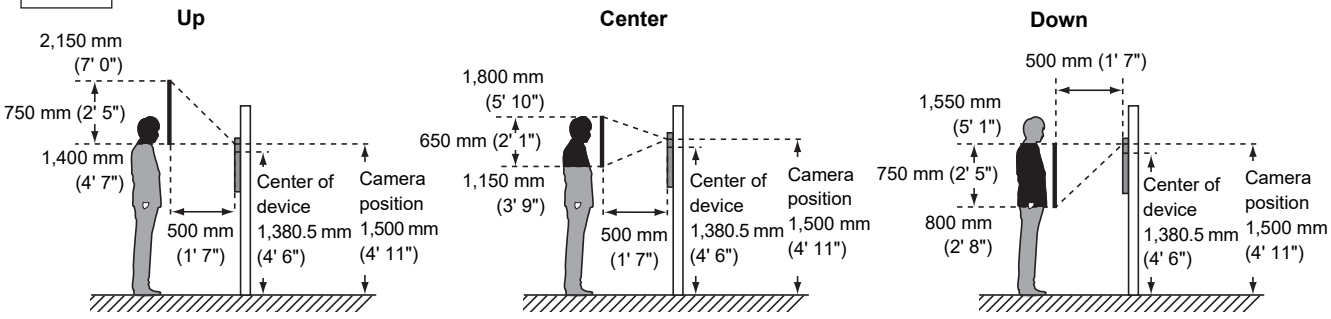

Horizontal

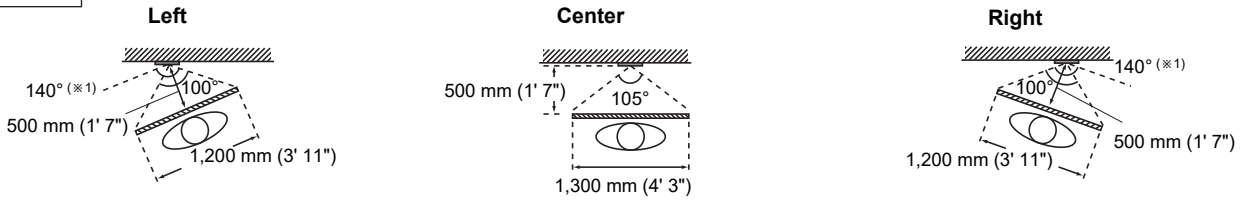

(※1): Zoom view range is approx. 140° at 500 mm (1' 7") distance from the camera.

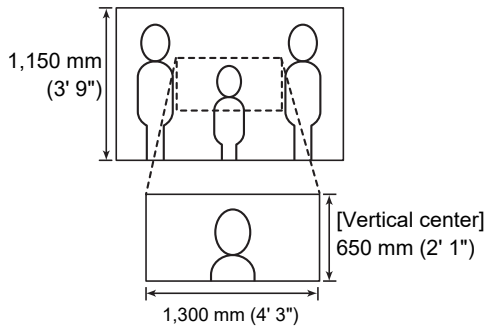

Wide View
The default is "Wide View".

Zoom View
The zoom position can be changed.

The dimensions are approximate in this page.

When light enters the camera, the monitor screen may flicker brightly or the subject may become dark. Try to prevent strong lighting from entering the camera directly.

■ Connection Precautions

● Cat-5e/6 cable

- For connection between devices, use a straight-through cable.
- If necessary, when bending the cable, please observe the manufacturer's recommendations. Failure to do so could cause a communication failure.
- Do not strip away the cable insulation any more than is necessary.
- Perform termination in accordance with TIA/EIA-568A or 568B.
- Before connecting the cable, be sure to verify conduction using a LAN checker or similar tool.
- A RJ45 covered connector cannot be connected to the LAN ports of the stations. Use cables without covers on the connectors.



- Be careful not to pull on the cable or subject it to excessive stress.

● Precautions regarding low-voltage line

- Use PE (polyethylene)-insulated PVC jacketed cable. Parallel or jacketed conductors, mid-capacitance, non-shielded cable is recommended.
- Never use twisted-pair cable or coaxial cable
- 2Pr quad V twisted pair cables cannot be used.



● Connection and disconnection of low-voltage lines

- Insert the line into the quick connection terminal.
- If the line does not go in easily, push the low-voltage line into the terminal while pressing down the detachment button.
- When removing a low-voltage line, pull on the line while pressing down the detachment button.

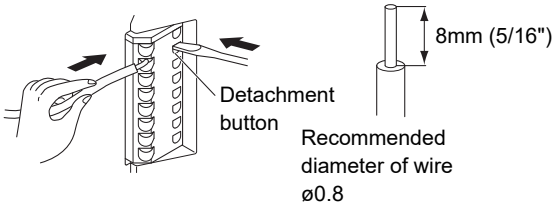

※The shape varies depending on a model.

- When connecting low-voltage lines, perform the connection using either the crimp sleeve method or soldering, then insulate the connection with electrical tape.

●Crimp sleeve method

1. Line up the solid wire and stranded wire and crimp them together.

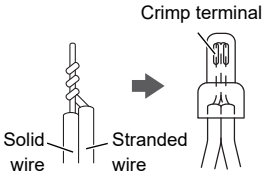

2. Overlap the tape by at least a half width and wrap the connection at least twice.

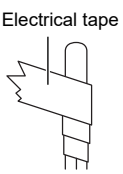

●Soldering method

1. Twist the stranded wire around the solid wire at least 3 times.

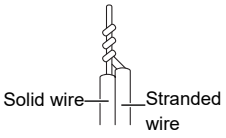

2. After bending down the point, perform soldering, with care that no wires protrude from the soldering.

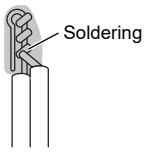

3. Overlap the tape by at least a half width and wrap the connection at least twice.

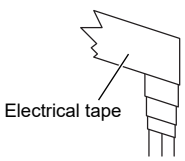

- If the connector-attached lead wire is too short, extend the lead with an intermediate connection.
- As the connector has polarity, perform the connection correctly. If the polarity is incorrect, the device will not operate.
- When using the crimp sleeve method, if the end of the connector-attached lead wire has been soldered, first cut off the soldered part and then perform crimp.
- **After completing connection of wires, check that there are no breaks or inadequate connections. When connecting low-voltage lines in particular, perform the connection using either soldering or the crimp sleeve method and then insulate the connection with electrical tape. For optimal performance, keep the number of wiring connections to a minimum.**
  Simply twisting low-voltage lines together will create poor contact or will lead to oxidization of the surface of the low-voltage lines over long-term use, causing poor contact and resulting in the device malfunctioning or failure.

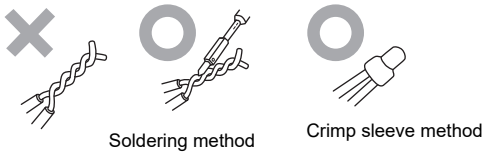

Soldering method　　Crimp sleeve method

Wiring Connection

■ IXG-MK

• Insulate and secure unused low-voltage lines and the connector-attached lead wire.

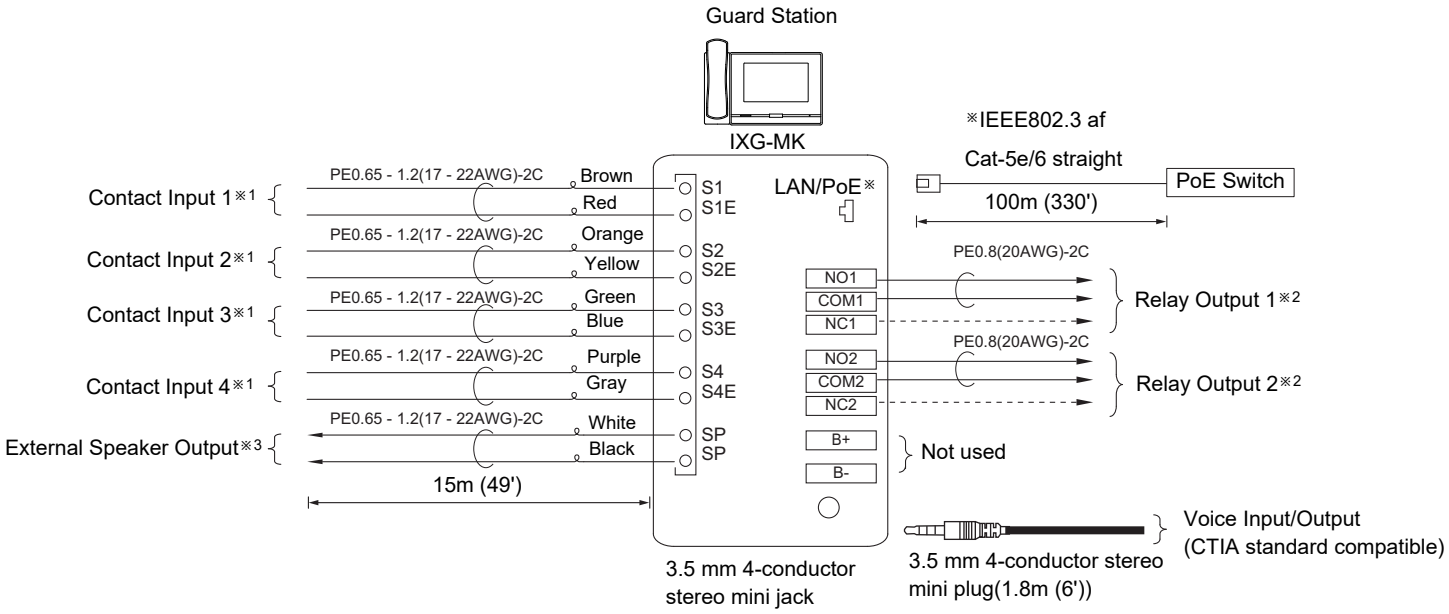

※1 Contact Input Specifications

Input method	Programmable dry contact (N/O or N/C)
	Level detection method
Detection time	200 msec or more
Contact resistance	Make: 700 Ω or less Break: 3 kΩ or more
Terminal short-circuit current	10 mA or less
Voltage between terminals	5.5 VDC or less (between open terminals)

※2 Relay Output Specifications

Output method	Form C dry contact (N/O or N/C)
Contact rating	24 VAC, 1A (resistive load) 24 VDC, 1A (resistive load) Minimum overload (AC/DC): 100mV, 0.1mA

※3 External Speaker Output Specifications

Output impedance	8 Ω
Maximum output power	0.5 w

■ IXG-DM7, IXG-DM7-HID

• Insulate and secure unused low-voltage lines and the connector-attached lead wire.

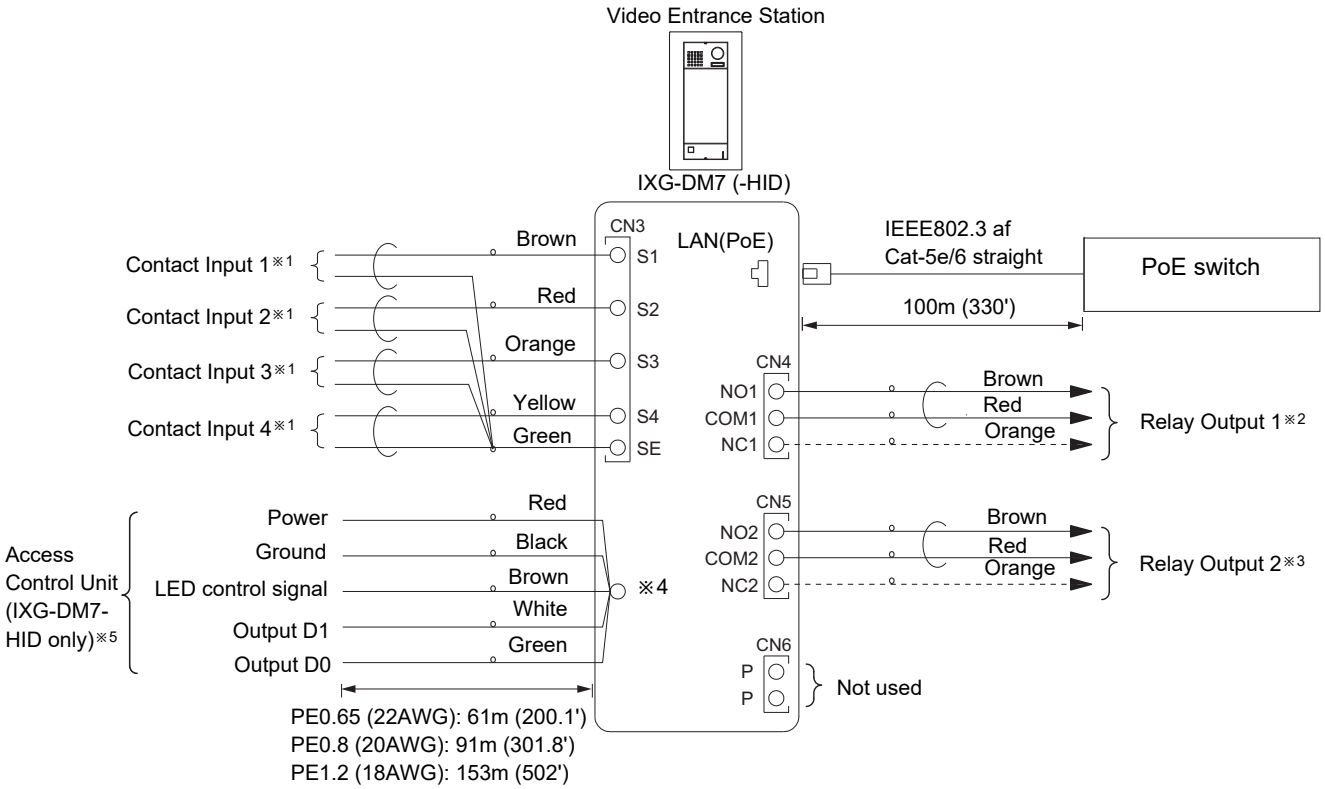

※1 Contact Input Specifications

Input method	Programmable dry contact (N/O or N/C)
	Level detection method
Detection time	200 msec or more
Contact resistance	Make: 700 Ω or less Break: 3 kΩ or more
Terminal short-circuit current	10 mA or less
Voltage between terminals	5.5 VDC or less (between open terminals)

※2 Relay Output 1 Specifications

Output method	Form C dry contact (N/O or N/C)
Contact rating	24 VAC, 3A (resistive load) 24 VDC, 3A (resistive load) Minimum overload (AC/DC): 100mV, 100mA

※3 Relay Output 2 Specifications

Output method	Form C dry contact (N/O or N/C)
Contact rating	24 VAC, 0.5A (resistive load) 24 VDC, 0.5A (resistive load) Minimum overload (AC/DC): 100mV, 0.1mA

※4 Card Reader Specifications

Power requirement	10.80 - 14.50 VDC at 250mA
Interface	Wiegand

※5 Compatibility access controller
• HoneyWell NetAXS-123
For the compatibility card, see “IXG-DM7, IXG-DM7-HID (→page 8)”.

■ IXGW-LC

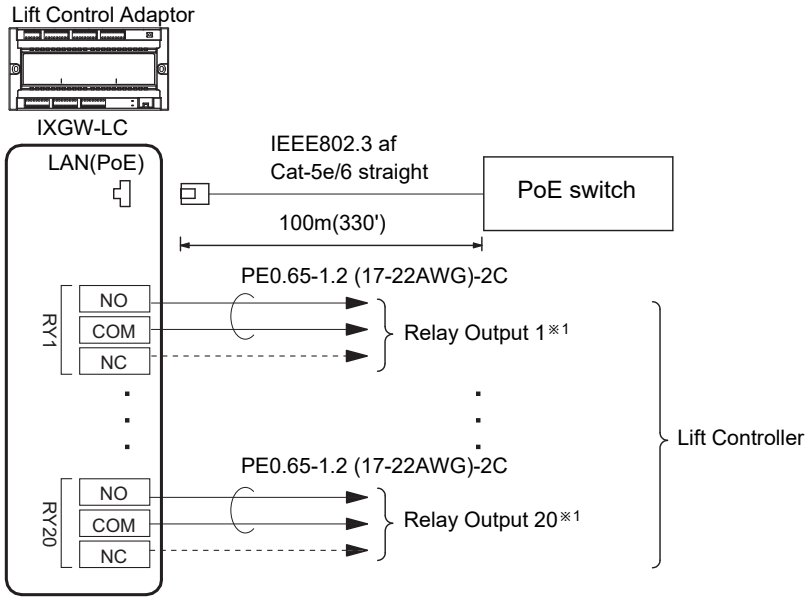

※1 Relay Output 1-20 Specifications

Output method	Form C dry contact (N/O or N/C)
Contact rating	24 VAC, 0.5A (resistive load) 24 VDC, 0.5A (resistive load) Minimum overload (AC/DC): 100mV, 0.1mA

■ IXGW-GW

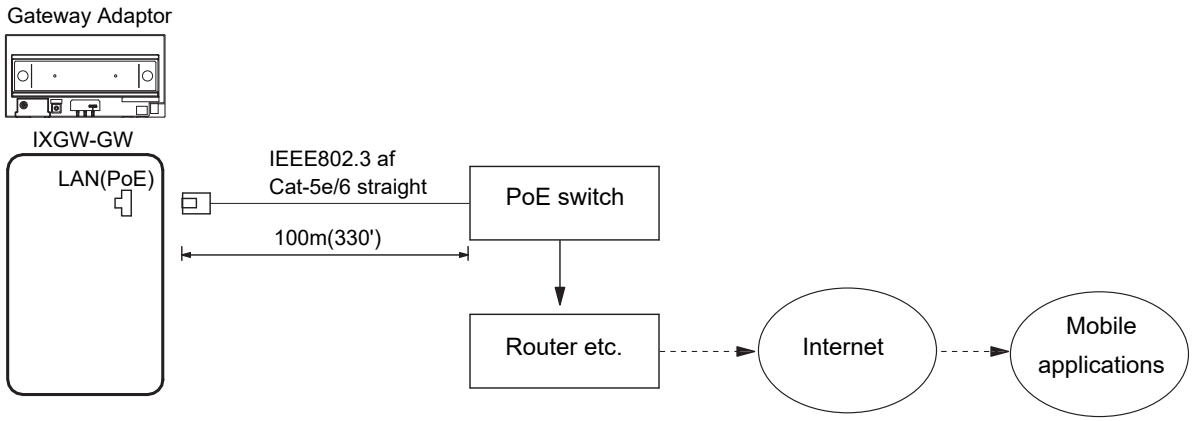

• If the Internet connection's uplink speed is slow, video may not be displayed properly. (An uplink speed of 16 Mbps or more is recommended.)

Specifications

Refer to "Operation Manual" for IXG-MK, IXG-DM7, IXG-DM7-HID.

■ IXG-DM7-BOX

Mounting	Flush wall-mounted
Materials	SPCC t1.6
Dimensions	156 mm (6-1/8") [W] × 317 mm (12-1/2") [H] × 60 mm (2-3/8") [D]
Mass	Approx. 1.8 kg (4.0 lbs)

■ IXGW-LC

Power	PoE (IEEE802.3af Class 0 standard)
Current consumption	Standby 2.1 W, Max. 4.4 W (48 VDC)
LAN	Ethernet (10BASE-T, 100BASE-TX), Auto MDI/MDI-X-compatible
Relay	20 relay outputs
Protocol	IPv4, IPv6, TCP, UDP, HTTP, HTTPS, IGMP, MLD, FTP, DHCP, NTP, DNS, TLS
Encryption system	TLS1.0, TLS1.1, TLS1.2
Packet transmission	Unicast and Multicast
Operating temperature	-10 °C to +50 °C (+14 °F to +122 °F)
Mounting	Wall-mounted
Materials	Self-extinguishing resin
Color	Middle gray
Dimensions	210 mm (8-1/4") [W] × 108.5 mm (4-1/4") [H] × 61 mm (2-3/8") [D]
Mass	Approx. 310g (0.69 lbs)

■ IXGW-GW

Power	PoE (IEEE802.3af Class 0 standard)
Current consumption	Standby 2.4 W, Max. 2.9 W (48 VDC)
LAN	Ethernet (10BASE-T, 100BASE-TX), Auto MDI/MDI-X-compatible
Protocol	IPv4, IPv6, TCP, UDP, SIP, HTTPS, RTP, RTCP, SRTP, SRTCP, IGMP, MLD, SFTP, DHCP, NTP, DNS, MQTT, ICE, DTLS, SDP
Encryption system	TLS1.0, TLS1.1, TLS1.2
Packet transmission	Unicast and Multicast
Channel	8
Operating temperature	-10 °C to +50 °C (+14 °F to +122 °F)
Mounting	Wall-mounted (DIN rail)
Materials	Self-extinguishing resin
Color	Black
Dimensions	210 mm (8-1/4") [W] × 108.5 mm (4-1/4") [H] × 61 mm (2-3/8") [D] (62.2mm (2-7/16") [D] with DIN rail)
Mass	Approx. 320g (0.71 lbs) (approx. 350g (0.78 lbs) with DIN rail)

About the Error Screen

If the error screen appeared on the entrance screen, follow the steps below:

- Confirm unit has been set up correctly using the IXG Support Tool.
- Check network connection using IXG Supervision Tool.
- Check wiring to Unit.

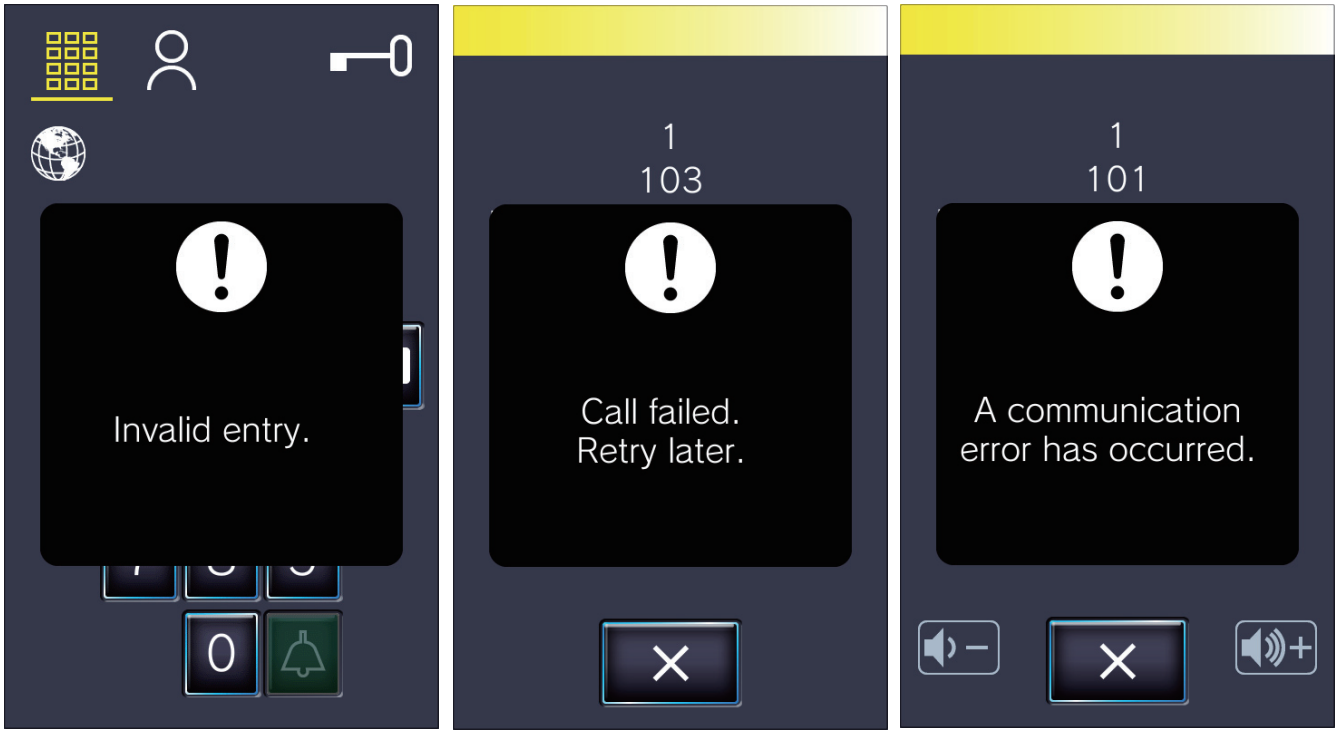

AIPHONE®

Providing Peace of Mind

https://www.aiphone.net/

AIPHONE CO., LTD., NAGOYA, JAPAN

Issue Date Mar. 2020 FK2526 Ⓑ P0320 RQ 62253