DHI-ARC3808H

Dahua Hybrid Panel

Series Overview

The Hybrid Panel is an alarm control panel that manages both wired and wireless peripherals. It comes with built-in wired inputs and outputs, which can be expanded through extension modules, and can connect to wireless peripherals through RF expansion modules. The Panel provides control over devices connected to interact with users and security companies. The panel is ideal for indoor installation.

Technical Specification

Port

Alarm Input	128 channels (8 local channels) Wired input: A maximum of 500 m. Cable:Twisted pair (oxygen-free copper wire, 57/0.145±0.007 mm, 1000 m, ≤19.5Ω).
Alarm Output	128 channels (4 local channels) Wired output: A maximum of 500 m. Cable:Twisted pair (oxygen-free copper wire, 57/0.145±0.007 mm, 1000 m, ≤19.5Ω).
Connected Peripheral	Up to 16 wired keypads Up to 8 wireless sirens(ARA12 series, ARA13 series)and 1 local siren Up to 128 wireless keyfobs(ARA24 series) Up to 16 expansion modules Up to 120 wireless door detectors (ARD323 series, ARD333 series. The quantity depends on actual alarm input connections) Up to 120 wireless PIR Detectors (ARD1233 series. The quantity depends on actual alarm input connections) Up to 120 wireless Dual-Tech Detectors (ARD2231 series. The quantity depends on actual alarm input connections)
Area	32 areas (rooms)
Network Mode	Ethernet, Wi-Fi and 2G/3G/4G networks (optonal)
Network Port	1 × RJ-45, 10 Mbps/100 Mbps Ethernet port.
Telephone Line	Yes (optional)
RS-485	2 channels.The maximum distance for one RS-485 bus is 1000m, and intercom devices must be limited to within 200m. Cable:Twisted pair (oxygen-free copper wire, 57/0.145±0.007 mm, 1000 m, ≤19.5Ω).
Storage Battery	Yes (12 V, 7 Ah，The backup battery is not included in the set)

- Hybrid system with 8 onboard inputs, 120 expandable wired or wireless inputs, 4 onboard outputs (2 dry contact outputs and 2 wet contact outputs) and 124 expandable wired or wireless outputs.
- Communicates through the Ethernet,Wi-Fi and 2G, 3G, 4G, and PSTN.
- Supports soft AP for network configuration.
- Connects with up to 8 IPC channels to verify alarm events through videos.
- Supports voice talk with the app or the alarm receiving center through the intercom device.
- Remote configuration and operation through the app and webpage.
- 2-channel RS-485 buses.

Auxiliary Power Output	3 channels (2 × auxiliary power output and 1 × siren power output); total current: 2 A

Video & Audio

Video Input	8 channels

Function

Indicator Light	5 indicators (1 × power status indicator, 1 × storage battery status indicator, 1 × 2 G/4 G status indicator, 1 × PSTN status indicator, and 1 × AP mode indicator)
Button	3 buttons (1 reset button, 1 power switch button, and 1 AP button)
Buzzer	Yes
SMS	Yes (up to 12 phone numbers)
Phone Call	Yes (up to 12 phone numbers)
Video Linkage	Yes
Offline Cache	Stores up to 50 alarm messages
Arm and Disarm	App, keyboard, keyfob, card, scheduled arming and disarming.
Remote Update	Cloud update Web
Network Protocol	SIA SoftGuard
Low Battery Detection	Yes
Tamper	Yes (1 × case tamper and 1 × wall tamper)
User Management	32 app users (30 × general users, 1 × admin user and 1 × installer) and 32 × keypad users
Logs	5000 pieces

Technical

Operating Current	132 mA/220 VAC
Operating Frequency	50 Hz/60 Hz

Wireless

Wi-Fi	Yes

General

Language	English, Spanish (Latin America), Spanish, French, Italian, Arabic, Turkish, Danish, Czech, Slovak, Russian, Portuguese, German, Dutch, Greek, Bulgarian, Polish;
Power Supply	100-240 VAC Supply(Standard) 13-15 VDC Power Adapter Supply (Optional)
Power Supply Type	Type A
Standby Time	36 hours (disarming, arming, and alarm once a day. Supports wired, Wi-Fi (select models) and 4 G conection. Does not supply power externally)
Low Battery Threshold	11,000 mV
Battery Restore Threshold	12,000 mV
Power Consumption	45W (max) 2.7 W (standby)
Operating Temperature	–10 °C to +55 °C (+14 °F to +131 °F)
Operating Humidity	10%–90% (RH)
Product Dimensions	304 mm × 235 mm × 90.8 mm (11.97" × 9.25" × 3.57")
Net Weight	1361 g (3.00 lb)
Gross Weight	1758 g (3.88 lb)
Installation	wall mount
Casing Material	PC + ABS
Appearance Color	White
Protection	IP30
Anti-corrosion Level	Basic Protection *The products are designed for general use and are applicable even in areas with no specific requirements for anti-corrosion protection.
Storage Temperature	–10 °C to +55 °C (+14 °F to +131 °F)
Storage Humidity	10%–90% (RH)
Packaging Dimensions	369 mm × 140 mm × 280 mm (14.53" × 5.51" × 11.02")

Wi-Fi

Wi-Fi Standard	IEEE 802.11b/g/n
Wi-Fi Frequency Range	2400 MHz–2483.5 MHz
Wi-Fi Power Transmission	≤20 dBm@2400 MHz–2483.5 MHz

Cellular Network

Cellular Network Standard	GSM/WCDMA/LTE
Frequency Range	EU: 4G: FDD-LTE: B1/B3/B7/B8/B20/B28A; TDD-LTE: B38/B40/B41; 3G: WCDMA: B1/B8; 2G: GSM: 1800/900MHz; LA: 4G: FDD-LTE: B1/B2/B3/B4/B5/B7/B8/B28; TDD-LTE: B40; 3G: WCDMA: B1/B2/B4/B5/B8; 2G: GSM: 850/900/1800/1900 MHz;
Transmitter Power (EIRP)	4G: Power class 3: 23 dBm±2dB 3G: Power class 3: 24 dBm+1/-3dB 2G: Power class 0: 30 dBm±3dB（GSM900） Power class 5: 33 dBm±3dB（GSM1800）

Ordering Information

Type	Model	Description
Hybrid Panel	DHI-ARC3808H	Dahua Hybrid Panel

Installation

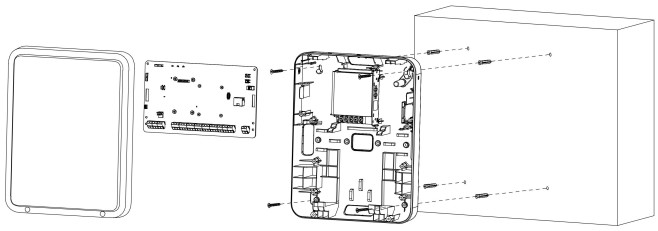

Dimensions (mm[inch])

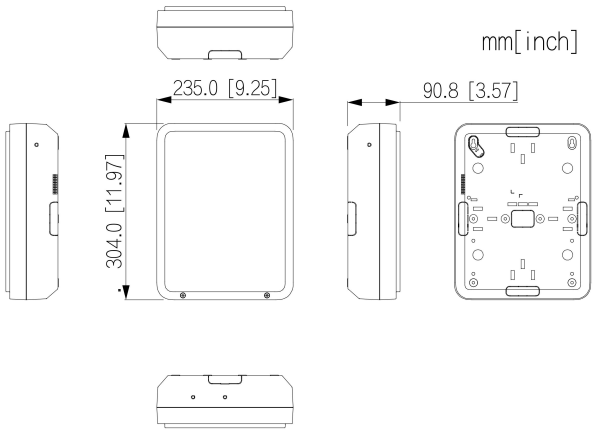

Application

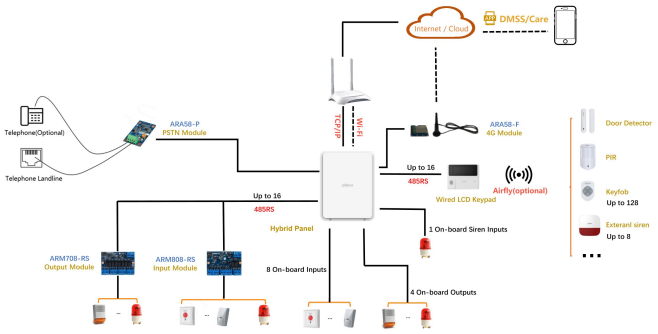

Rev 002.000

© 2026 Dahua. All rights reserved. Design and specifications are subject to change without notice. Pictures in the document are for reference only, and the actual product shall prevail.