DHI-ARK32C-RW2

Wired LCD Keypad(Support intercom and wireless peripherals expansion)

- Supports built-in medical, fire, and emergency alarms.
- Supports arming and disarming with password, IC card or DESFire card.
- Supports searching for and displaying the system status.
- Offers cloud update with automatic recovery from failed updates.
- Features voice broadcast.
- Features voice talk.
- Hybrid panel that supports the connection of wireless peripherals.

Series Overview

The LCD Keypad is designed to simplify control of alarm systems. Operation is straightforward, allowing you to simply enter commands on the LCD to arm, disarm, bypass zones, trigger alarms and perform other tasks. The keypad also provides clear, real time information on the system status, giving you vital insight into current conditions.

Technical Specification

Port

Wired Input	2 local channels. Connected to a maximum of 500 m. Cable: Twisted pair (oxygen-free copper wire, 57/0.145±0.007 mm, 1000 m, ≤19.5Ω).
Wired Output	1 local channel. Connected to a maximum of 500 m. Cable: Twisted pair (oxygen-free copper wire, 57/0.145±0.007 mm, 1000 m, ≤19.5Ω).
Wireless Peripheral	32 peripherals
RS-485	1×RS-485 port.Connected to a maximum of 1000 m ，and intercom devices must be limited within 200 m; Cable:Twisted pair (oxygen-free copper wire, 57/0.145±0.007 mm, 1000 m, ≤19.5Ω).
Microphone	1×MIC (5 m pick-up distance)
Screen	1 × LCD screen. Supports displaying 96 characters in 4 lines.

Video & Audio

Volume Control	Yes
Two-way Audio	2-way voice talk.
Voice Broadcast	Yes

Function

Indicator Light	4 indicators (External power supply, arming/disarming, fault, and alarm)
Button	20 buttons (10 digital buttons and 10 function buttons)
Arm and Disarm	Password; IC/DESFire card
Remote Update	Cloud update, WEB
Tamper	Yes
Measuring Range (Temperature)	–10 °C to +55 °C (+14 °F to +131 °F)

Technical

Scenario	Indoor
Operating Current	1 A (Max), 125 mA (Standby)
Sound Pressure	Maximum: 75 dB(A) at 1 meter

Wireless

Carrier Frequency	433.1 – 434.6 MHz
Transmitter Power (EIRP)	Limit 10 mW
Communication Mechanism	Two-way
Communication Distance	Up to 1,400 m (4593.18 ft) in an open space.
Encryption Mode	AES128
Frequency Hopping	Yes

General

Language	English, Italian, French (Europe), German, Portuguese (Europe), Dutch, Spanish (Europe), Spanish (Latin America), Turkish, Russian, Polish, Czech, Slovak, Danish, Hungarian, Croatian, Ukrainian, Swedish, Serbian, Greek, Bulgarian.
Power Supply	9-15 VDC
Power Consumption	12 W (Max), 1.5 W (Standby)
Operating Temperature	-10 °C to +55 °C (+14 °F to +131 °F) (indoor)
Operating Humidity	10%–90% (RH)
Product Dimensions	170.0 mm × 129.0 mm × 31.2 mm (6.69" × 5.08" × 1.23")
Net Weight	372 g (0.82 lb)
Gross Weight	566 g (1.25 lb)

Installation	Wall mount
Casing Material	PC + ABS
Appearance Color	White
Protection	IP30
Certifications	CE
Accessory	Included: 2 IC cards
Anti-corrosion Level	Basic Protection *The products are designed for general use and are applicable even in areas with no specific requirements for anti-corrosion protection.
Storage Temperature	–10 °C to +55 °C (+14 °F to +131 °F)
Storage Humidity	10%–90% (RH)
Packaging Dimensions	214.0 mm × 162.0 mm × 57.0 mm (8.43" × 6.38" × 2.24")

Ordering Information

Type	Model	Description
LCD Keypad	DHI-ARK32C-RW2	Wired LCD Keypad(Support intercom and wireless peripherals expansion)

Installation

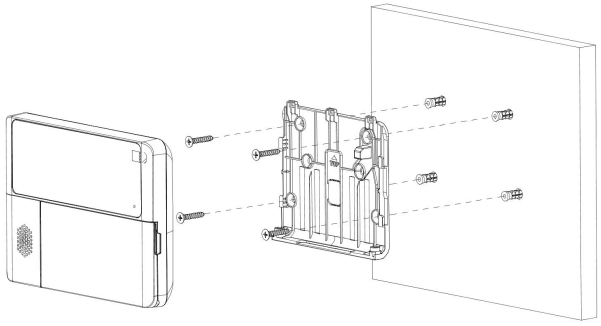

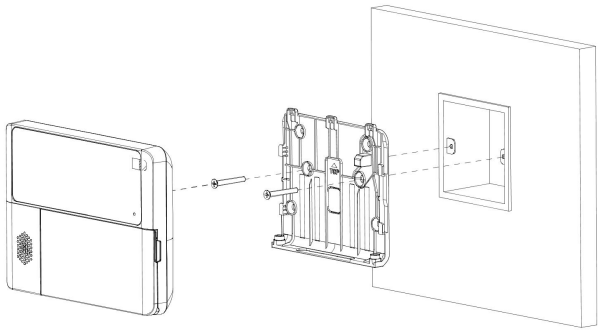

Dimensions (mm[inch])

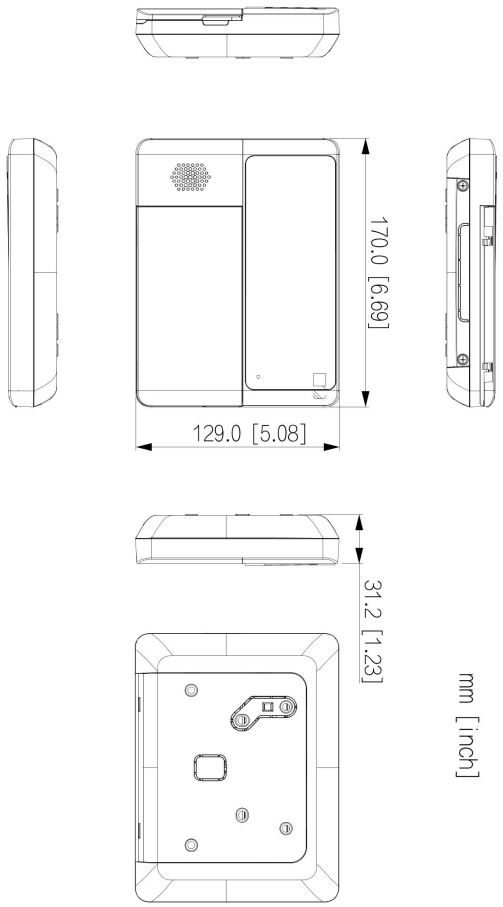

Application

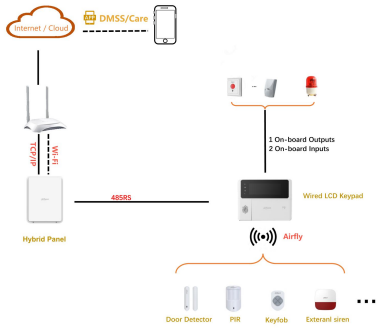

Rev 002.000 © 2026 Dahua. All rights reserved. Design and specifications are subject to change without notice. Pictures in the document are for reference only, and the actual product shall prevail.