DHI-HY-SAV849HA-ET

5MP IR AI-Fire Smoke Sensing Network Camera with Temperature and Humidity Detection



- Remote check based on smoke sensing and video alarm linkage
- Intelligent monitoring: Flame detection
- High precision temperature and humidity sensors are used to monitor the temperature and humidity data in the equipment environment
- With split-spectrum smoke chamber and intelligent algorithm, eliminate the false alarm effectively
- Ultra-low power consumption design enables the smoke sensing module to operate for 3 years with only battery
- Built-in high decibel buzzer, smoke alarm is over 85 dB at 3 meters
- Self-test and low battery warning
- Intelligent compensation algorithm relieves the impact of dust accumulation and environment changing on smoke sensing module
- Insect-proof and dust-proof design for smoke sensing module
- Built-in 7 alarm voices, and user can import custom voices
- 5MP 1/2.7" CMOS image sensor, low luminance, and high definition image
- H.265 codec, high compression rate, ultra-low bit rate
- Flip mode, WDR, 3D NR, HLC, BLC, digital watermarking, applicable to various monitoring scenes
- 2/2 Alarm in/out, 1/1 audio in/out; supports max. 256 GB Micro SD card; built-in Mic and speaker
- 12V DC/PoE power supply
- Built-in IR light; the max. IR LEDs Length is 20 m (65.62 ft)

System Overview

Together with high-performance microprocessor and advanced electronic technology, AI-fire Smoke Sensing Network Camera has the characteristcs of high sensitvity and stability. Based on the mounting bracket, it can be easily installed on the ceiling. With built-in high-decibel buzzer, it will send out a sound and light alarm signal in time to remind users to take effectve measures immediately when the smoke concentraton, equipment ambient temperature and humidity reach the alarm setting value.

Functions

Multiple Sensing Technology

This device integrates functions of video surveillance and smoke detection, offering a solution to do the remote check through the camera.

Fire Detection & Alarm

With built-in fire detection function, the camera has the ability to detect fire from a long distance. Because camera integrates smoke sensing chamber and flame detection algorithm, it can provide higher fire detection accuracy than general thermal camera.

Lower False Alarm

The smart algorithm of automatic compensation against dust concentration helps reduce false alarms. Based on the advanced split-spectrum smoke chamber, the device has higher accuracy rate on smoke detection.

High-quality Video

Supporting 5MP video output, the camera enables users to pinpoint the fire locaton.



Scene

This device is applicable to most places where both fire alarm and video surveillance are needed, such as:

·Chain stores

·Unattended base stations

·Unmanned power distribution rooms

·ATM areas

·Libraries

·Garbage rooms

Technical Specification

Smoke Detector

Indicators	Standby: Green indicator flashes once per minute Fault: Red indicator flashes once per minute Alarm: Red indicator flashes once per second Self-testing: Red indicator flashes once per second
Protection Area	30 m^2–60 m^2
Working Principle	Photoelectric
Alarm Mode	Sound and LED Indicator
Operating Voltage	12V DC/PoE and 3V lithium battery
Operating Current	≤ 30uA (Camera excluded) ≤ 300mA (Camera included)
Battery Life	＞ 3 years
Alarm Type	Smoke alarm, fault alarm, low battery alarm, heat alarm, humidity alarm
Alarm Volume	≥ 85 dB (A) @ 3 m (9.84 ft)

Camera

Appearance	Circular
Image Sensor	1/2.7" CMOS
Pixel	5 MP
Max. Resolution	2592 (H) × 1944 (V)
Scanning System	Progressive
Electronic Shutter Speed	Auto/Manual 1/3s~1/100000s
Min. Illumination	0.002Lux (color) 0.0002Lux (dark) 0Lux (IR)
S/N Ratio	＞ 56 dB
Illumination Distance	Distance up to 20 m (65.62 ft)
Illuminator Number	2 (IR LED)

Lens

Lens Type	Fixed-focal
Lens Mount	M8
Focal Length	2.0 mm
Max. Aperture	F2.0
Field of View	Horizontal: 144°; Vertical: 92°; Diagonal: 179.6°
Iris Control	Fixed
Close Focus Distance	0.2 m (0.66 ft)

Smart Event

AI Event	Flame detection

Video

Video Compression	H.265; H.264; H.264H; H.264B
Smart Codec	Smart H.265+/ Smart H.264+
Video Frame Rate	Main stream: 2592×1944 (1 fps-20 fps) 2688×1520 (1 fps–25/30 fps) 2560×1440 (1 fps–25/30 fps) 2304×1296 (1 fps–25/30 fps) 1920×1080 (1 fps–25/30 fps) Sub stream: D1 (1 fps–20 fps) D1 (1 fps–25/30 fps) Third stream: 1920×1080 (1 fps-17/24 fps)
Video Bit Rate	H.264: 32 Kbps–10240 Kbps H.265: 12 Kbps–7168 Kbps
Day/Night	Auto(ICR)/Color/B/W
BLC	Yes
HLC	Yes
WDR	90 dB
White Balance	Auto/natural/street lamp/outdoor/manual/regional custom
Gain Control	Auto/Manual
Noise Reduction	3D NR
Default Bit Rate with Default Resolution	2048 Kbps (2688 × 1520)
Image Rotation	Yes
Image Flip	Yes
Mirror	Yes
Rotation	Yes
Privacy Masking	8 areas
Language	English, TradChinese, Italian, Spanish, Japanese, Russian, French, German, Portuguese, Turkish, Polish, Romanian, Hungarian, Korean, Czech, Dutch, Ukrainian, Vietnamese, Arabic, Spanish(Europe), Hebrew, Thai, Bahasa Indonesia

Audio

Audio Port	Yes
Built-in MIC	Yes
Built-in Speaker	Yes
Audio Compression	PCM; G.711a; G.711Mu; G.726; AAC; G.723
Audio Sampling	8KHz/16KHz/32KHz/48KHz/64KHz

Alarm

Alarm	Yes
Alarm Event	No SD card; SD card full; SD card error; network disconnection; IP conflict; illegal access; motion detection; video tampering; scene changing; smart motion detection; audio detection; flame detection;heat detection; humidity detection; smoke detected alarm; fault alarm; smoke alarm disconnected; low battery alarm

Network

Network Port	1 RJ-45 PoE 10M/100M Ethernet ports
Network Protocol	HTTP;TCP;RTSP;RTP;UDP;RTCP;SMTP;FTP;DHCP;DNS;DDNS;IPv4/v6;SNMP;QoS;UPnP;NTP
Interoperability	ONVIF; MileStone; Genetec; CGI; PISA

User/Host	10 channels at most
Storage	FTP; SFTP; Micro SD card (256G); NAS
Browser	IE7 and newer versions; Chrome 8+; Firefox 3.5+; Safari 5+

Function

Image Setting	Brightness; Contrast; Sharpness; Saturation; gamma
OSD Overlay	Channel title / time title / geographical location / battery voltage / heat / humidity
Record Mode	Manual record; video detection record; schedule record; alarm record Record priority: Manual > external alarm > video detection > schedule
Micro SD Card (Max.)	256 GB
Default	Support one-click restore
User Management	Up to 20
Security	Username and password; MAC address; HTTPS; IEEE802.1x; network access control

Certification

Certification	CE-LVD: EN 62368-1 CE-EMC: Electromagnetic Compatibility Directive 2014/30/EU FCC: 47 CFR FCC Part 15, Subpart B

Port

Audio Input	1 channel (RCA port)
Audio Output	1 channel (RCA port)
Alarm Input	2 channels in: 5mA 3V–5V DC
Alarm Output	2 channels Out: 300mA 12V DC
RS-485 Port	1 (baud rate range:1200 bps–115200 bps)

Power

Operating Voltage	Adapter: 12V DC(±25%); PoE: 802.3af
Power Supply	DC12V+PoE
Power Consumption	Basic power consumption: 2.1W (12V DC); 2W (PoE) Max. power consumption (ICR + IR LED intensity): 4.9W (12V DC); 4.8W (PoE)

Environment

Operating Temperature	–10°C to +55°C (+14°F to +131°F)
Operating Humidity	0%–95% RH (non-condensing)

Structure

Casing Material	Plastic
Product Dimensions	175.3 mm×120.0 mm×81.6 mm(6.9" × 4.72" × 3.21")
Packaging Dimensions	205 mm × 148 mm × 111 mm (8.06" × 5.82" × 4.37")(L × W × H)
Installation	Ceiling mount
Power Adapter	Optional
Lens	Standard

Ordering Information

Type	Part Number	Description
AI-Fire Smoke Sensing Network Camera	DHI-HY-SAV849HAP-ET	5MP IR AI-fire Smoke Sensing Network Camera with PAL standard
	DHI-HY-SAV849HAN-ET	5MP IR AI-fire Smoke Sensing Network Camera with NTSC standard
Accessories (optional)	PFM300-E	DC Adapter
	PFM301-E	Power

Installation

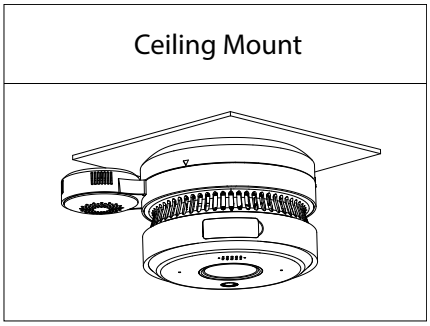

Dimensions (mm[inch])

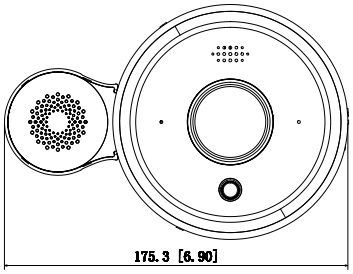

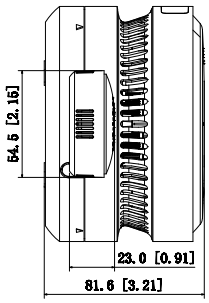

Rev 001.001 © 2022 Dahua. All rights reserved. Design and specifications are subject to change without notice.
Pictures in the document are for reference only, and the actual product shall prevail.