MS Series Proximity Readers

- **Sleek Attractive Packages**
- **Ultra Thin Profile**
- **Smallest Door Frame (Mullion) Reader Available**
- **Better Read Range Performance Than Competing Products of Similar Size**



Keri's ***MS Series Proximity Readers*** are designed to blend aesthetics, read range performance, and small package size with an extremely thin profile into a product that is priced significantly less than competing proximity readers. The readers are for use exclusively with Keri's revolutionary access control system based on the ***PXL-500 Tiger II Controller*** and were designed by some of the industry's top RF engineers, with many years of experience in proximity reader design.

The smallest readers in the series are the ***MS-3000 MicroStar™ Reader*** and the ***MS-5000 MiniStar™ Reader***. The ***MicroStar Reader*** measures just 3.4" long x 1.4" wide x 0.38" thick (86mm x 36mm x 10mm) thick, and is designed to mount on a metal window or door frame (mullion) or directly on a wall. Read range is up to 4" (10cm). The ***MiniStar Reader*** measures 4.3" long x 3.0" wide x 0.38" thick (109mm x 76mm x 10mm), and can be mounted on a single gang electrical box or flat on a wall. Read range is up to 6" (15cm) when mounted at least one inch off metal. If the reader is mounted using a metal electrical junction box with the thickness of the wall material separating the reader from the box, read range will be reduced.

The ***MS-7000 SuperStar™ Reader*** measures just 8.5" long x 6" wide x 0.83" thick (21.6cm x 15.2cm x 2.1cm), with a read range of up to 14" (35cm). This reader is designed for applications where greater read range adds to the convenience of the system, such as parking access or physically challenged access.

The readers are attractively designed with a thin profile and modern appearance. The readers are compatible with all of Keri's proximity card styles as well as the small, extremely robust Keri Key Tag. Additionally, they can read any Indala ASP Card or Tag if they are to be used in conjunction with a PXL-500 Controller.

KERI SYSTEMS INCORPORATED

DATA SHEET | MS Series Proximity Readers

MS Series Proximity Readers

Specifications

Size

3.4" H x 1.4" W x 0.38" T (86mm x 36mm x 10mm)	(MS-3000)
4.3" H x 3.0" W x 0.38" T (109mm x 76mm x 10mm)	(MS-5000)
8.5" H x 6" W x 0.83" T (21.6cm x 15.2cm x 2.1cm)	(MS-7000)

Weight

2.1 oz. (59g)	(MS-3000)
3.2 oz. (90g)	(MS-5000)
1.3 lbs. (582g)	(MS-7000)

Read Range*

Up to 4" (10cm)	(MS-3000)
Up to 6" (15cm)	(MS-5000)
Up to 14" (35cm)	(MS-7000)

Input Voltage

+12 VDC nom. (5-14 VDC)	(MS-3000)
+12 VDC nom. (5-14 VDC)	(MS-3000)
+11 VDC to +14 VDC	(MS-7000)

Current Draw

50 mA typical	(MS-3000)
100 mA typical	(MS-5000)
200 mA typical	(MS-7000)

Operating Temperature
-40˚ C to +65˚C

LED Indicator
Tri-Color Standard (Red, Green, Amber)

Audio Tone
Standard

Frequency
125 KHz excitation, 62.5 KHz data return

Warranty
Lifetime warranty against defects in materials and workmanship.

Specifications subject to change without notice.
Trademarks are the property of their respective owners.

MS-3000 MicroStar Reader

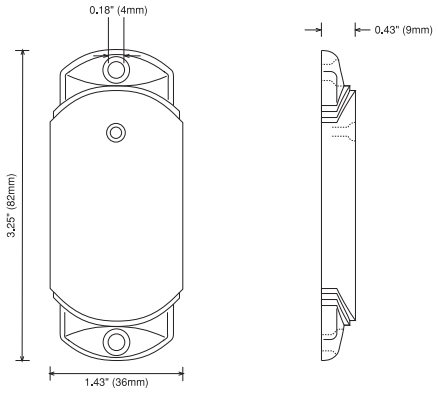

MS-5000 MiniStar Reader

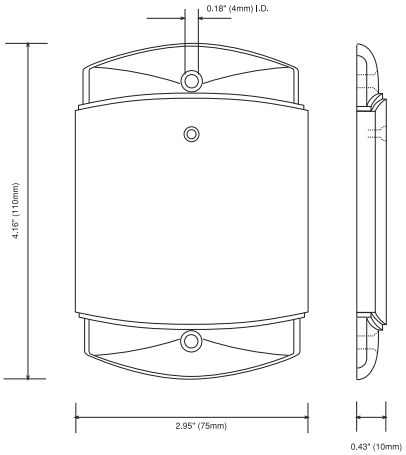

MS-7000 SuperStar Reader

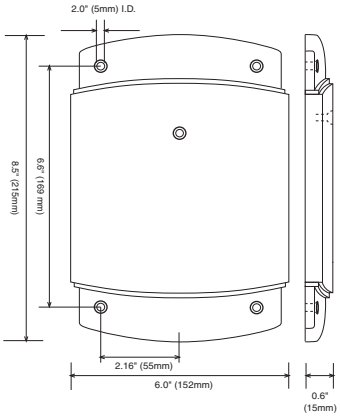

* Read range is stated in a clean RF and electrical environment with KC-10X card presented parallel to reader surface.

KERISYSTEMS INCORPORATED