MS-3000 MicroStar Reader

The MS-3000 MicroStar Reader

The MS-3000 MicroStar Reader is intended for installation on a window mullion or a door frame, on or off metal, in proximity applications where an unobtrusive reader is required. The reader provides an audible beeper and a multi colored LED to annunciate the reader's status when used with a PXL-250, PXL-100, or IntelliProx.

- Amber - to indicate normal operation awaiting an access event
- Green - to indicate a valid card has been presented or the door has been unlocked for access
- Red - to indicate an invalid card has been presented or the door is in an alarm condition

The MS-3000 MicroStar Reader is housed in a black, weatherproof, shock resistant package. The reader provides optimum performance when mounted on aluminum; read range is slightly reduced if the reader is not mounted on aluminum.

1.0 Specifications

1.1 Dimensions

- 3.25 inches High x 1.41 inches Wide x 0.375 inches Deep
- 8.26 cm High x 3.95 cm Wide x 0.96 cm Deep

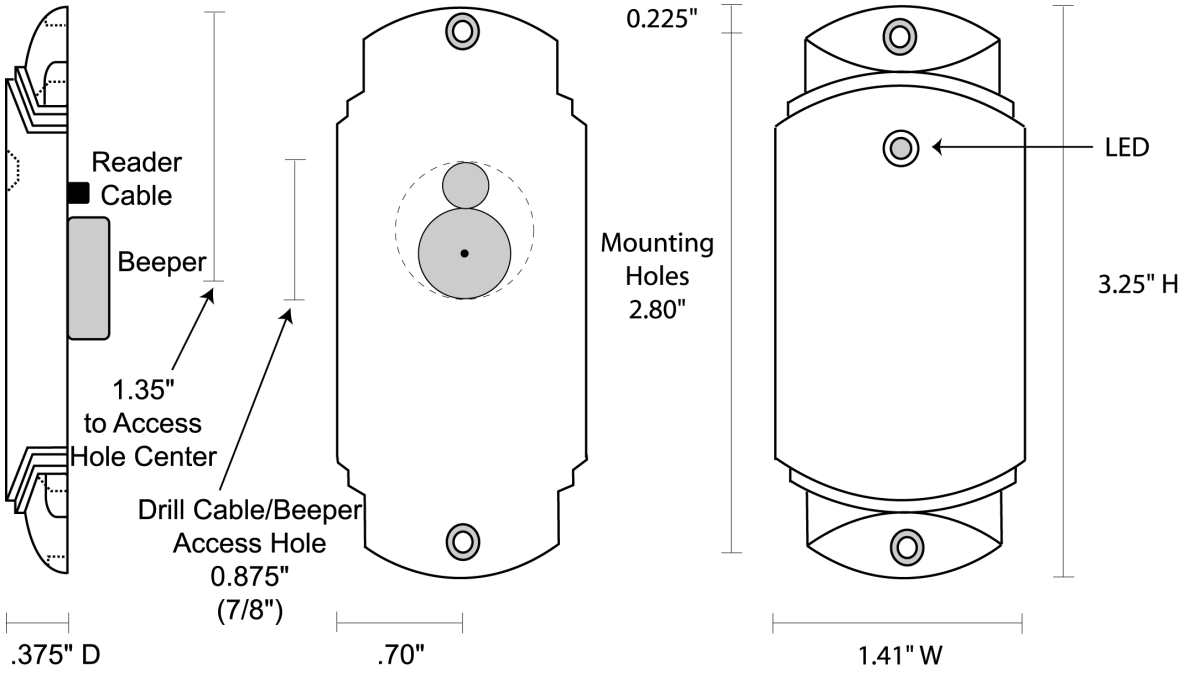

Figure 1: MS–3000 Dimensions

KERISYSTEMS INCORPORATED
1530 Old Oakland Road, Suite 100
San Jose, CA 95112 USA
(800) 260-5265 (408) 451-2520 FAX (408) 441-0309
Web: http://www.kerisys.com E-mail: sales@kerisys.com

MS-3000 MicroStar Reader

1.2 Operating Voltage

- 5v to 14v DC @ 50 ma

1.3 Cable Specifications

- up to 500 feet using six conductor, shielded, stranded AWG 24 wire (such as Belden 9536)

2.0 Mounting Instructions

Three holes need to be drilled to mount the MicroStar Reader (see Figure 1). One large hole (0.875" - 7/8") accommodates the beeper and the reader cable. Two small holes are for mounting the reader on the mullion or door frame (hole size is dependent upon the size of the mounting screw).

NOTE: Do not mount the reader near sources of Electromagnetic Interference (EMI) such as a computer monitor. EMI degrades a reader's read range.

3.0 Connections

The MicroStar Reader does not require configuration; there are no switches or jumpers to set. The MicroStar Reader is normally connected to a PXL-250, PXL-100, or IntelliProx, but can be connected to an alternative host controller/alarm panel through an IntelliProx used in its Wiegand input device mode. All connections needed to support the reader are made through the reader's cable. Please consult the tables on pages 2 and 3 for specific connection instructions.

3.1 PXL-250 Connections

The "A" reader connects to TB5, pins 1 through 6 (TB5 has a seventh pin, but no connection is made to that pin). The "B" reader connects to TB6, pins 1 through 6 (TB6 has a seventh pin, but no connection is made to that pin).

Connecting to the PXL-250 – TB5 or TB6

Pin #	Function	Wire Color
1	Reader Antenna	Blue
2	Beeper	Green
3	Reader Power	Red
4	Reader Ground	Black
4	Shield	Silver
5	Green LED	Brown
6	Red LED	White
7	no connection	–

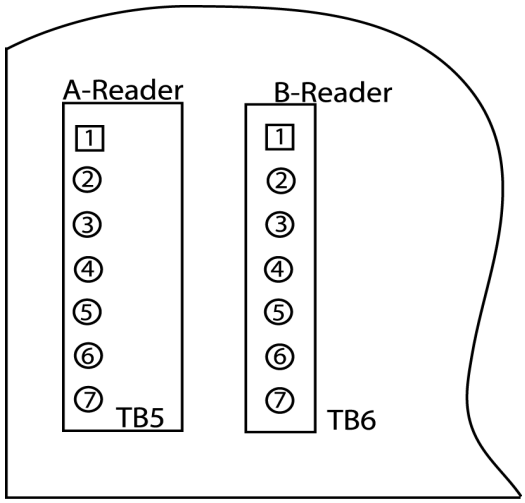

Figure 2: PXL-250 Connections

MS-3000 MicroStar Reader

3.2 Design 5 PXL-100 Connections

The "A" reader connects to TB2, pins 14 through 19. The "B" reader to TB3, pins 20 through 25.

Connecting the PXL-100 – TB2

Pin #	Function	Wire Color
14	Green LED	Brown
15	Beeper	Green
16	Reader Power	Red
17	Reader Ground	Black
17	Shield	Silver
18	Reader Antenna	Blue
19	Red LED	White

Connecting to the PXL-100 – TB3

Pin #	Function	Wire Color
20	Green LED	Brown
21	Beeper	Green
22	Reader Power	Red
23	Reader Ground	Black
23	Shield	Silver
24	Reader Antenna	Blue
25	Red LED	White

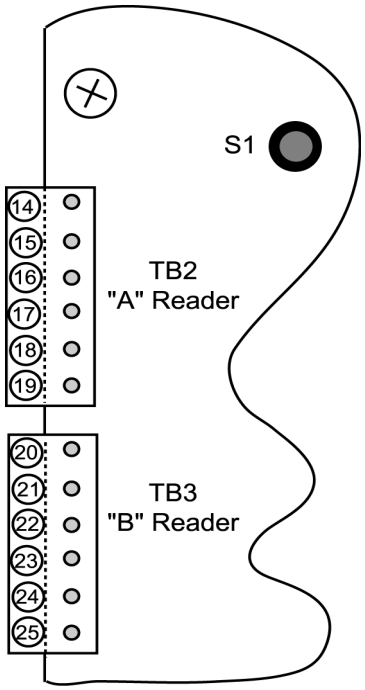

Figure 3: Design 5 PXL-100 Connections

NOTE: Please contact customer support at Keri Systems for information regarding connecting a Reader to a Design 4 PXL-100. A Design 4 PXL-100 can be identified by the location of its power connection made at the middle of the left edge of the printed circuit board.

3.3 IntelliProx Connections

The reader connects to TB1, pins 1 through 6.

Connecting to the IntelliProx – TB1

Pin #	Function	Wire Color
1	Reader Antenna	Blue
2	Beeper	Green
3	Green LED	Brown
4	Red LED	White
5	Reader Power	Red
6	Reader Ground	Black
6	Shield	Silver

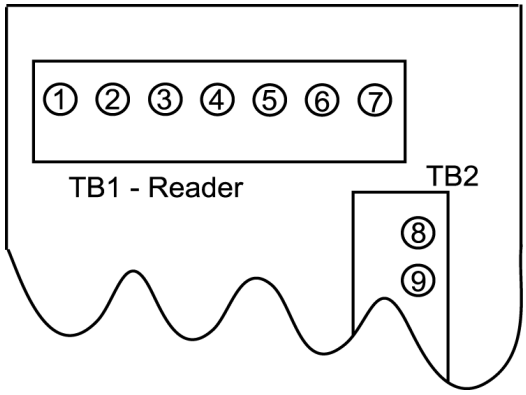

Figure 4: IntelliProx Connections

MS-3000 MicroStar Reader

4.0 Installation Verification

The following information applies to an installation with a Keri Systems controller or IntelliProx unit. When used with an alternative host controller/alarm panel through an IntelliProx used in its Wiegand input device mode, the actions of the reader's LED and beeper are controlled by the alternative host controller/alarm panel and might not match those of a Keri Systems controller.

The reader's power is provided by the controller, so the reader is powered on when the controller is powered on. The reader's normal state is to display a constantly on Amber LED as it waits for a card or tag to be presented.

To verify the reader is functioning properly, pass a Keri Proximity Card or a Keri Key Tag within a few inches of the reader. The reader will beep and either the Green or Red LED will flash (depending upon whether or not the card/tag has been enrolled at the controller) and then return to steady Amber.

To verify the reader's read range, hold a Keri Proximity Card or a Keri Key Tag parallel to the reader, about 1 foot away and slowly draw the Card/Tag in toward the reader. Note the distance when the reader recognizes the card. The MicroStar reader's range will be up to 4 inches for a card and 2 inches for a tag depending upon the installation conditions, the material on which the reader is mounted, and whether it is a card or a tag being read. Due to the physical size difference between cards and tags, tags provide approximately 50% less read range than cards.

Refer to the Troubleshooting the Reader Installation section beginning on page 7 if the reader is not functioning properly.

5.0 Troubleshooting the Reader Installation

Problem	Probable Cause	Corrective Action
The reader does not recognize a card/tag (no beep, no LED flash).	1. One or more of the reader's wiring connections are incorrect.	• Power down the controller and verify the wiring connections are correct for the reader/ controller combination per the instructions provided in the Connections section on pages 2 and 3.
	2. The reader is not receiving proper power from the controller.	• Verify the voltage supplied to the reader is between 5 and 14 VDC.
	3. The reader is mounted too close to a device that radiates electromagnetic interference.	• Devices such as computer monitors radiate electromagnetic interference that affects read range. When possible, relocate either the reader or the device to provide a greater distance between the two.
	4. A jumper is not set correctly on the controller.	• For a PXL-250: Verify there is a jumper across pins 1 and 2 of JP4 (refer to the Technical Reference manual for more information - Keri p/n 01836-001). • For a PXL-100: If the controllers are using TAP™ software, verify JP1 on the controller and the jumper on the Receiver card[1] are installed across both jumper pins. If the controllers are using Doors™ software, verify JP1 on the controller and the Receiver card[1] are not installed across both pins (typically the jumper will be installed onto one of the pins to keep it available). • For an IntelliProx: Verify there is not a jumper across pins 1 and 2 of JP1 (typically the jumper can be installed onto one of the pins to keep it available).
	– continued on next page –	

1. The receiver board's jumper is on the underside of the board. Gently pull the receiver board away from the controller, verify the jumper setting is correct per your application, carefully align the connectors on the receiver board with the pins on the controller, and gently push the receiver board back into place.

MS-3000 MicroStar Reader

Problem	Probable Cause	Corrective Action
	5. You are using an incorrect type of card.	• Make sure you are using an access card that is compatible with the reader.
	6. The reader is unable to read the card.	• Verify there is nothing that can interfere between the reader and the access card.
The reader has a short read range.	1. The reader's controller is not properly grounded.	• Ensure there is a quality earth ground connection made to the controller. Refer to the controller's documentation for specific information regarding the earth ground connection.
	2. The shield wire for the reader's cable has opened somewhere between the reader and the controller.	• Verify the shield line from the controller to the reader is one continuous, connected line. Refer to the controller's installation documentation and verify the shield line is correctly connected to the controller.
	3. The reader is mounted too close to a device that radiates electromagnetic interference.	• Devices such as computer monitors radiate electromagnetic interference that affects read range. When possible, relocate either the reader or the device to provide a greater distance between the two.
	4. The controller is mounted too close to a device that radiates electromagnetic interference.	• Devices such as computer monitors radiate electromagnetic interference that affects the performance of the receiver board on the controller. When possible, relocate either the controller or the device to provide a greater distance between the two.
	5. The reader is powered by a switching power supply.	• Switching power supplies are EMI sources. Change to a linear, regulated power supply.