SMART4380

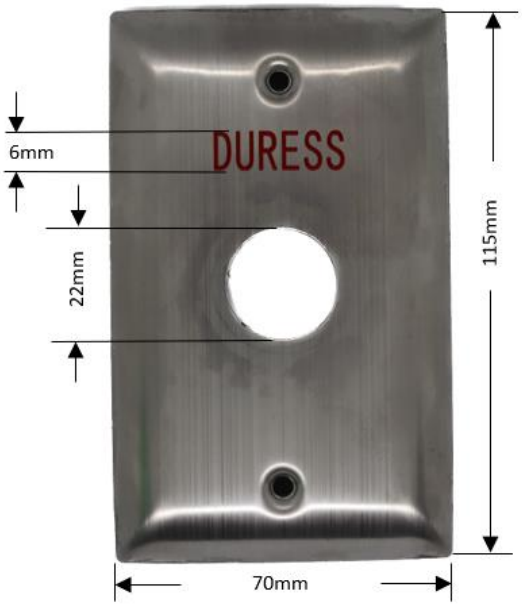

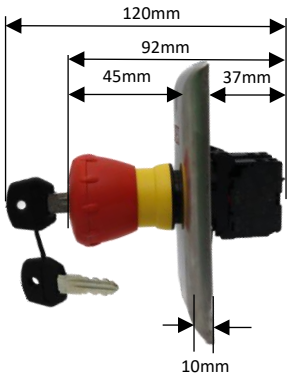

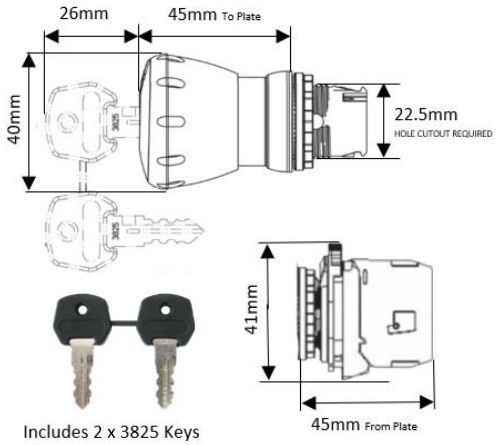

Plate Specifications

Plate Material : STAINLESS STEEL
Plate Color : SILVER
Plate style : CURVED
Plate Text Printed : "DURESS"
Plate Text Color : RED
Plate Button Hole Cutout Size : 22mm
Plate Mounting Holes : 2
Plate Screw Hole Cutout Size : 5mm
Plate Size : 115Hx70Wx10D (mm)

Switch Specifications

Series : 800FP
Material : Plastic
Component Type : E-Stop
Component Style : Mushroom Head Key Type
Button Color : RED
Button Diameter: 40 mm
Mounting Cutout Hole Size : 22.5 mm
Material – Operator : Plastic Material
Material – Bezel : Glass-Filled Nylon / PA6 / PA66 (Polyamide 6)
Material – Body/Housing : Plastic
Material – Spring : Stainless Steel
Operator Action : Key to Release
Coupling Pate Included : YES
Contact Block Included : YES
IP Rating : IP66
Illuminated : NO
Tightening Torque Nominal : 1.7 Nm

Relative Humidity : 50% ~ 95% RH
Mechanical Service Life : 300000 cycles
Shock Acceleration MAX : 100 g
Shock Duration MAX : 11 ms
Operating Temperature : -25° ~ 70° C
Storage Temperature : -40° ~ 85° C
Vibration Acceleration MAX : 10 m/s^2
Vibration Displacement (Peak to Peak MAX) : 1.52 mm
Vibration Duration MAX : 180 Mins
Vibration Frequency – Operational MAX : 2000 Hz
Illuminated : No
Key : Yes
Button Size : 40DIA x 67.3D (mm)

Certifications : UR, UL, CSA, CCC, CE, RoHS
Standards Compliance : NEMA ICS-5, UL 508, EN 60947-1, EN 60947-5-1, EN 60947-5-5, IEC 60947-1, ISO 13850
CE Marked : Yes
RoHS Approved : Yes